NOTES:

1. ALL EXPOSED CONCRETE SHALL HAVE A BROOM FINISH.

2. EXPANSION JOINTS SHALL BE INSTALLED AT 500 FOOT MAXIMUM INTERVALS AND AT FIXED STRUCTURES (INLETS, BUILDINGS). SEE CONCRETE WALK AND MULTI–USE PATH JOINT DETAILS.

3. CONTRACTION JOINTS SHALL BE INSTALLED AT 5 FOOT INTERVALS OR INTERVALS EQUAL TO SIDEWALK WIDTH. SEE CONCRETE WALK AND MUILT–USE PATH JOINT DETAILS.

4. IF SIDEWALK IS PLACED ADJACENT TO CURB AND GUTTER, CONTRACTION JOINTS SHALL LINE UP WITH CURB AND GUTTER JOINTS.

5. LONGITUDINAL JOINTS ARE NOT ALLOWED IN CONCRETE WALK OR MULTI–USE PATH.

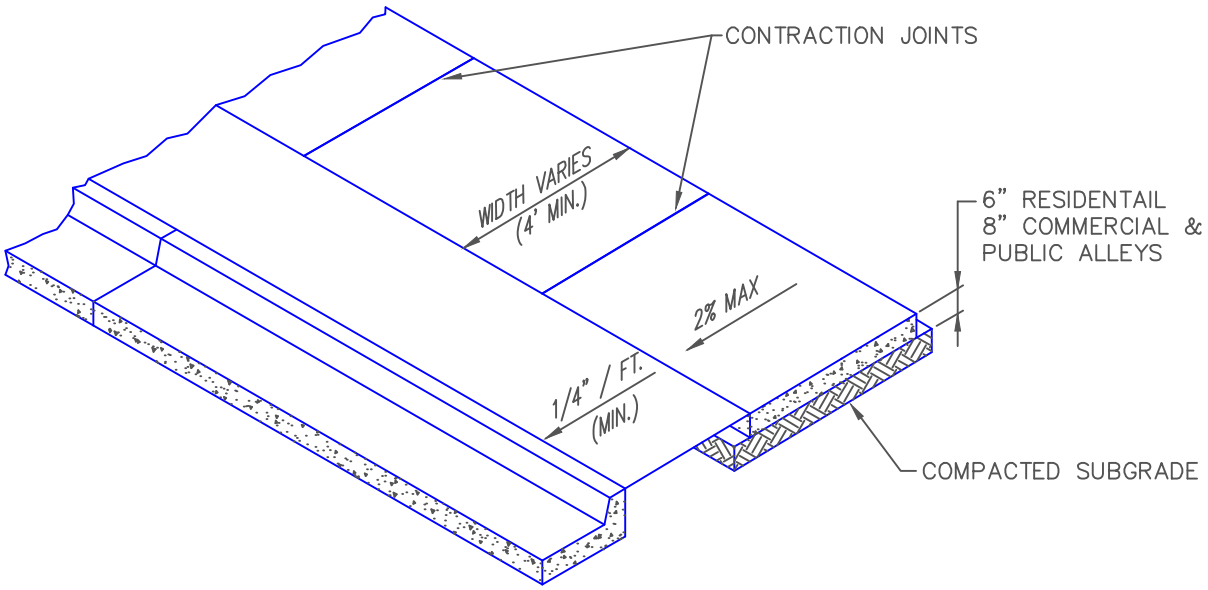

DRAWN BY: JSH CHECKED BY: WGH APPROVED BY: DIRECTOR OF PUBLIC WORKS	CITY OF BOULDER, COLORADO CONCRETE WALK AND MULTI–USE PATHS	ISSUED: JULY 2, 1998 REVISED: OCT 6, 2009 DRAWING NO. 2.02.A