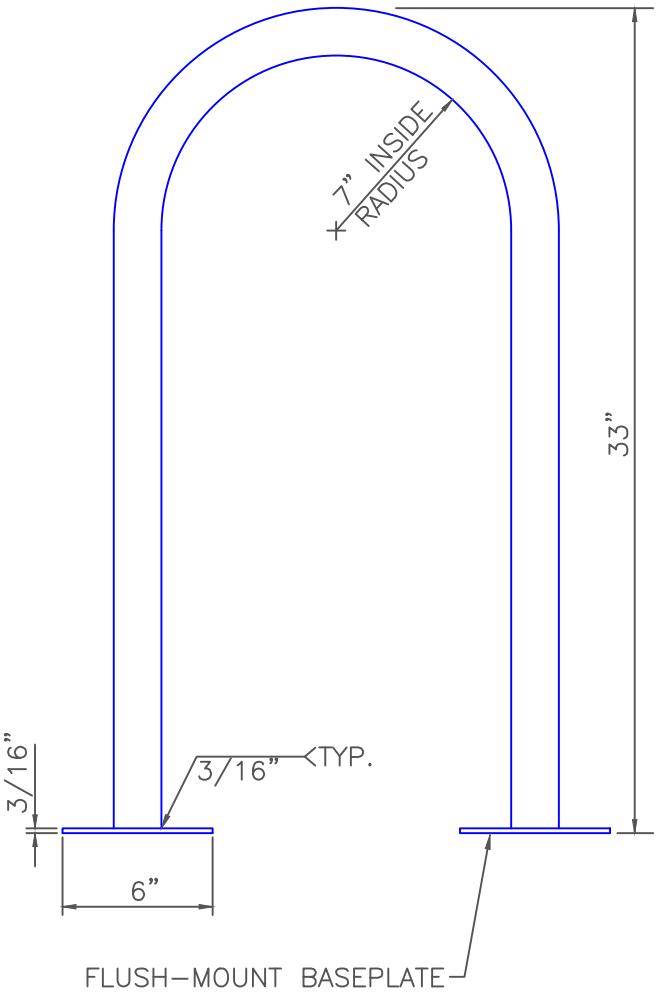

NOTES:

DIMENSIONS:

1. HEIGHT–33" FROM THE GROUND
2. CONTINUOUS BEND INSIDE RADIUS=7"

MATERIALS AND CONSTRUCTION:

1. MINIMUM OR 1 1/4" SCHEDULE 40 STEEL PIPE (1 5/8" OUTSIDE DIAMETER)
2. MAXIMUM 1 1/2" SCHEDULE 40 STEEL PIPE (2" OUTSIDE DIAMETER)
3. SOLID ONE–PIECE CONSTRUCTION; CONTINUOUS BEND; LEGS 14"–18" APART
4. GALVANIZED WITH BLACK POWDER COAT FINISH
5. FLUSH MOUNTED WITH WELDED BASE PLATES (6" DIAMETER, 3/16" THICK BASE PLATE). HIDDEN OR VANDAL–RESISTANT FASTENERS (SCREWS OR EXPANSION BOLTS)

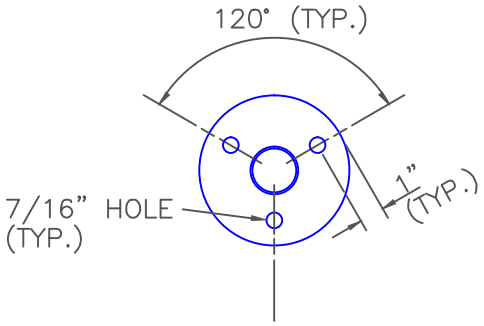

BASEPLATE DETAIL

DRAWN BY: JSH CHECKED BY: RJH APPROVED BY: DIRECTOR OF PUBLIC WORKS	CITY OF BOULDER, COLORADO INVERTED "U" BICYCLE RACKS	ISSUED: JULY 2, 1998 REVISED: OCT 6, 2009 DRAWING NO. 2.52.A