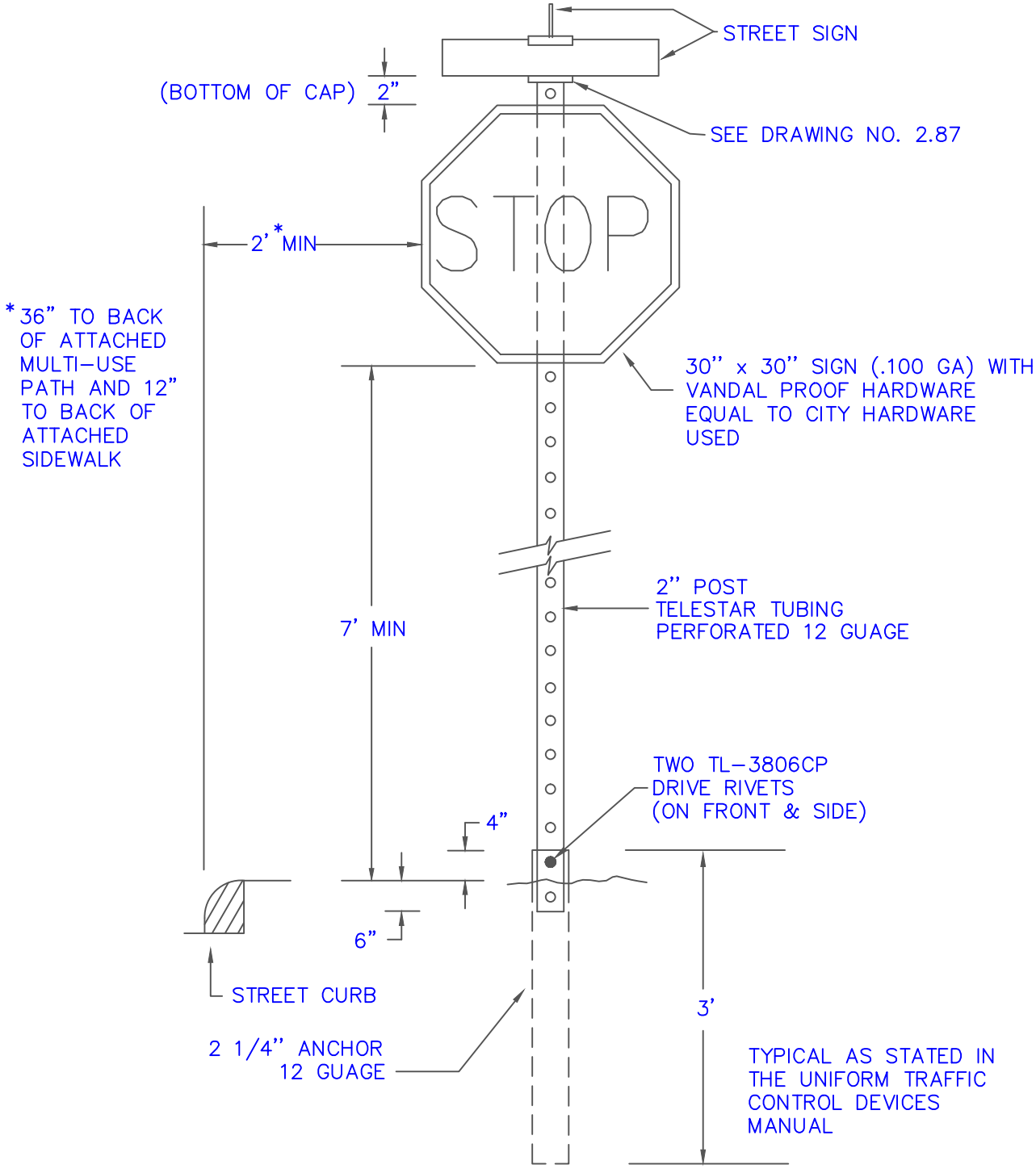


DRAWN BY: JSH

CHECKED BY: MGS

APPROVED BY:
DIRECTOR OF PUBLIC WORKS

CITY OF BOULDER, COLORADO

# SIGN INSTALLATION DETAILS

ISSUED: JULY 2, 1998

REVISED: OCT 6, 2009

DRAWING NO.

2.81