NOTE:

ALL 9" STREET NAME SIGNS SHALL BE OF EXTRUDED ALUMINUM ALLOY 6065-T6, OR APPROVED EQUAL. .091" THICK WEB WITH .250" THICK EDGES.

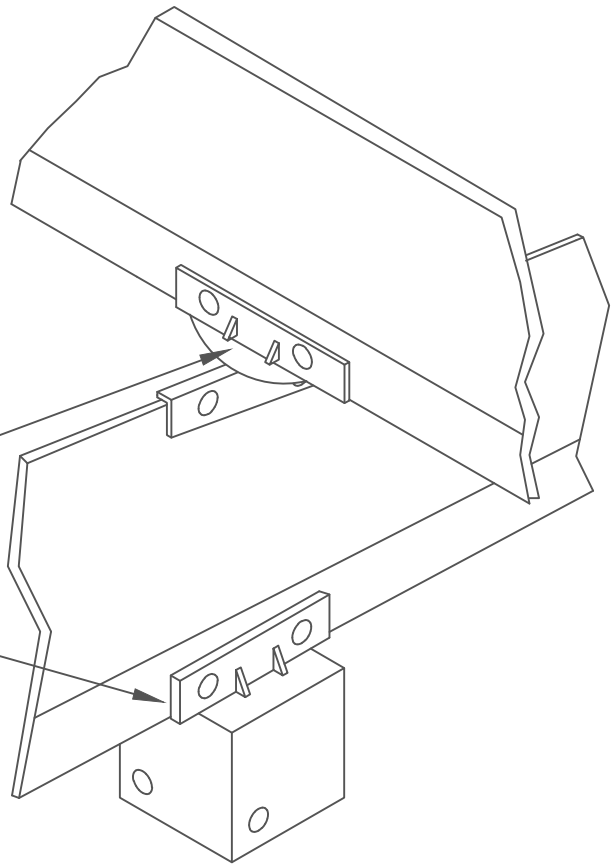

ALL HARDWARE CONSISTANT WITH EXISTING CITY MATERIALS

DRAWN BY: JSH CHECKED BY: MGS APPROVED BY: DIRECTOR OF PUBLIC WORKS	CITY OF BOULDER, COLORADO STREET NAME SIGN MOUNTING DETAILS	ISSUED: JULY 2, 1998 REVISED: OCT 6, 2009 DRAWING NO. 2.87