GENERAL NOTES

ALL WORK SHALL BE DONE IN ACCORDANCE WITH THE COLORADO DEPARTMENT OF TRANSPORTATION 2005 SPECIFICATIONS FOR ROAD AND BRIDGE CONSTRUCTION.

STRUCTURE EXCAVATION AND BACKFILL SHALL BE AS SHOWN ON THE PLANS EXCEPT SHORING IS REQUIRED FOR EXCAVATION ADJACENT TO THE ROADWAY. TEMPORARY EXCAVATION SUPPORT SHALL BE PAID FOR BY ITEM 206, SHORING.

EXPANSION JOINT MATERIAL SHALL MEET AASHTO SPECIFICATION M213.

A COLORED STRUCTURAL CONCRETE COATING FINISH WILL BE REQUIRED, AS SHOWN ON THE PLANS, ON EXPOSED CONCRETE SURFACES TO 1 FOOT BELOW FINISH GROUND. THE COLOR SHALL BE GRAY, EQUIVALENT TO FEDERAL STANDARD 595B COLOR NO. 16360, AND IS TO BE SELECTED FROM TEST PANELS PROVIDED BY THE CONTRACTOR.

GRADE 60 REINFORCING STEEL IS REQUIRED.

ALL REINFORCING STEEL SHALL BE NON-EPOXY COATED UNLESS OTHERWISE NOTED.

(E) DENOTES EPOXY COATED REINFORCING STEEL.

THE FOLLOWING TABLE GIVES THE MINIMUM LAP SPLICE LENGTH FOR EPOXY COATED REINFORCING BARS PLACED IN ACCORDANCE WITH SUBSECTION 602.06. THESE SPLICE LENGTHS SHALL BE INCREASED BY 25% FOR BARS SPACED AT LESS THAN 6" ON CENTER.

BAR SIZE	#4	#5	#6	#7	#8	#9	#10	#11
SPLICE LENGTH FOR CLASS D CONCRETE	1'-3"	1'-7"	2'-5"	2'-10"	3'-8"	4'-8"	5'-11"	7'-3"

WHEN THE CONTRACTOR ELECTS TO SUBSTITUTE EPOXY COATED REINFORCEMENT FOR BLACK REINFORCING BARS, THE MINIMUM LAP SPLICE SHALL BE AS DESCRIBED ABOVE.

THE FOLLOWING TABLE GIVES THE MINIMUM LAP SPLICE LENGTH FOR BLACK REINFORCING BARS PLACED IN ACCORDANCE WITH SUBSECTION 602.06. THESE SPLICE LENGTHS SHALL BE INCREASED BY 25% FOR BARS SPACED AT LESS THAN 6" ON CENTER.

BAR SIZE	#4	#5	#6	#7	#8	#9	#10	#11
SPLICE LENGTH FOR CLASS D CONCRETE	1'-1"	1'-4"	1'-7"	1'-11"	2'-6"	3'-1"	3'-11"	4'-10"

THE ABOVE SPLICE LENGTHS SHALL BE INCREASED BY 20 PERCENT FOR 3 BAR BUNDLES AND 33 PERCENT FOR 4 BAR BUNDLES.

THE CONTRACTOR SHALL BE RESPONSIBLE FOR THE STABILITY OF THE STRUCTURE DURING CONSTRUCTION.

STATIONS, ELEVATIONS, AND DIMENSIONS CONTAINED IN THESE PLANS ARE CALCULATED FROM A RECENT FIELD SURVEY. THE CONTRACTOR SHALL VERIFY ALL DEPENDENT DIMENSIONS IN THE FIELD BEFORE ORDERING OR FABRICATING ANY MATERIAL.

THE INFORMATION SHOWN ON THESE PLANS CONCERNING THE TYPE AND LOCATION OF UNDERGROUND UTILITIES IS NOT GUARANTEED TO BE ACCURATE OR ALL INCLUSIVE. THE CONTRACTOR IS RESPONSIBLE FOR MAKING HIS OWN DETERMINATION AS TO THE TYPE AND LOCATION OF UNDERGROUND UTILITIES AS MAY BE NECESSARY TO AVOID DAMAGE THERETO. THE CONTRACTOR SHALL CONTACT THE UTILITY NOTIFICATION CENTER OF COLORADO AT 1-800-922-1987 AT LEAST 2 DAYS (NOT INCLUDING THE DAY OF NOTIFICATION) PRIOR TO ANY EXCAVATION OR OTHER EARTHWORK.

ENGINEERING GEOLOGY

THE FOUNDATION DESIGN IS BASED UPON THE GEOTECHNICAL ENGINEERING STUDY PREPARED BY GEOCAL, INC., DATED SEPTEMBER 9, 2008, JOB NO. G07.1146.000.

FOR BORING LOCATIONS, BORING LOGS AND ADDITIONAL GEOTECHNICAL INFORMATION, SEE THE GEOLOGY SUBSET.

DESIGN DATA

AASHTO, FOURTH EDITION LRFD WITH CURRENT INTERIMS

DESIGN METHOD: LOAD AND RESISTANCE FACTOR DESIGN

LIVE LOAD: HL-93 (DESIGN TRUCK OR TANDEM, AND DESIGN LANE LOAD)
DEAD LOAD: ASSUMES 36 LBS. PER SQ. FT. FOR BRIDGE DECK OVERLAY

REINFORCED CONCRETE:

CLASS D CONCRETE: f'c = 4,500 psi
REINFORCING STEEL: fy = 60,000 psi
SULFATE EXPOSURE: CLASS 0

CAISSON CONCRETE:

CLASS BZ CONCRETE: f'c = 4,000 psi
REINFORCING STEEL: fy = 60,000 psi
SULFATE EXPOSURE: CLASS 0

SEE DETAIL SHEETS FOR ADDITIONAL DESIGN DATA AND LOADING.

LEGEND

W1 / A — CROSS REFERENCE DRAWING NUMBER (IF BLANK, REFERENCE IS TO SAME SHEET); SECTION OR DETAIL IDENTIFICATION

1 — DENOTES KEY NOTE REFERENCE

ABBREVIATIONS

AH. = AHEAD
ABUT. = ABUTMENT
B.F. = BACK FACE
BK. = BACK
BOT. = BOTTOM
BRG. = BEARING
CIP = CAST-IN-PLACE
CLR. = CLEAR
CONST. = CONSTRUCTION
CONT. = CONTINUOUS
DWG. = DRAWING
E.F. = EACH FACE
ELEV. = ELEVATION
EMBED. = EMBEDMENT
EQ. = EQUALLY
F.F. = FAR FACE
GALV. = GALVANIZED
HCL = HORIZONTAL CONTROL LINE
JT. = JOINT
MAX. = MAXIMUM
MIN. = MINIMUM
N.F. = NEAR FACE
NO. = NUMBER
NOM. = NOMINAL
O.C. = ON CENTER
PGL = PROFILE GRADE LINE
PROJ. = PROJECTION
SHLD. = SHOULDER
SPA. = SPACED
STA. = STATION
STD. = STANDARD
STR. = STRUCTURE
SYMM. = SYMMETRICAL
TYP. = TYPICAL

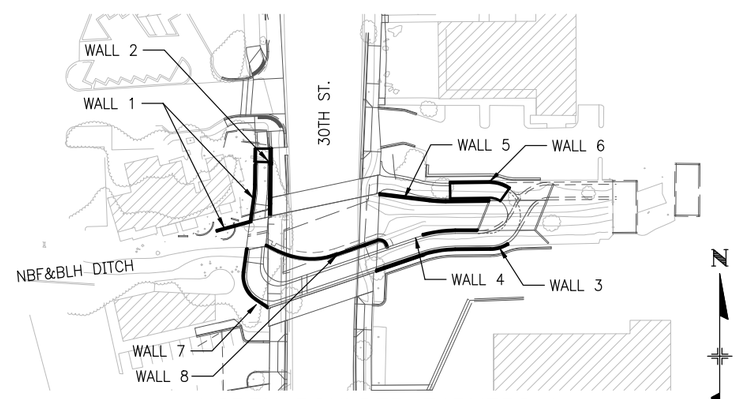

NORTH BOULDER FARMERS & BOULDER LEFT HAND (NBF&BLH) DITCH VICINITY MAP

INDEX OF DRAWINGS

W1 GENERAL INFORMATION
W2 SUMMARY OF QUANTITIES
W3 GENERAL LAYOUT - WALL 1
W4 GENERAL LAYOUT - WALL 2
W5 GENERAL LAYOUT - WALL 3
W6 GENERAL LAYOUT - WALL 4
W7 GENERAL LAYOUT - WALL 5
W8 GENERAL LAYOUT - WALL 6
W9 GENERAL LAYOUT - WALL 7
W10 GENERAL LAYOUT - WALL 8
W11 GENERAL LAYOUT - WALL 9 (1 OF 2)
W12 GENERAL LAYOUT - WALL 9 (2 OF 2)
W13 CAISSON SUMMARY (1 OF 2)
W14 CAISSON SUMMARY (2 OF 2)
W15 WALL TYPE A DETAILS
W16 WALL TYPE B DETAILS
W17 WALL TYPE C DETAILS
W18 WALL TYPES D & F DETAILS
W19 WALL TYPE E DETAILS
W20 BRIDGE RAIL TYPE 8 (SPECIAL)
W21 PILASTER AND BRIDGE RAIL DETAILS
W22 BARRIER MOUNTED PEDESTRIAN RAILING
W23 WALL MOUNTED PEDESTRIAN RAILING
W24 GROUND MOUNTED PEDESTRIAN RAILING
W25 EXISTING ROCK WALL MODIFICATIONS (1 OF 3)
W26 EXISTING ROCK WALL MODIFICATIONS (2 OF 3)
W27 EXISTING ROCK WALL MODIFICATIONS (3 OF 3)

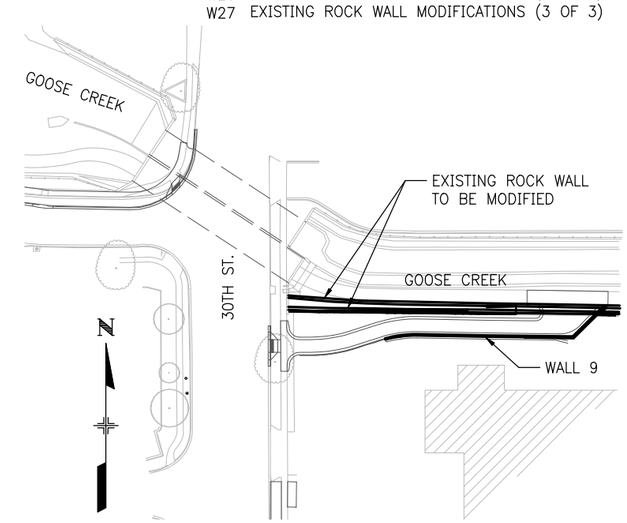

GOOSE CREEK VICINITY MAP

FOR BURIED UTILITY INFORMATION
THREE (3) BUSINESS DAYS BEFORE YOU DIG
CALL 811
(or 1-800-922-1987)
UTILITY NOTIFICATION CENTER OF COLORADO (UNCC)
www.uncc.org

TSIOUVARAS SIMMONS HOLDERNESS
CONSULTING ENGINEERS

Computer File Information			
Creation Date:	06-17-08	Initials:	ARP
Last Modification Date:	12-08-09	Initials:	PMH
Full Path:	P:\070205D - 30th St\CAD\Sheets\		
File Name:	070205-W01-General Info.dgn		
CAD Ver. MicroStation V8 Orig. Scale: NONE		Units:	ENGLISH

Sheet Revisions

CITY OF BOULDER PUBLIC WORKS DEPARTMENT

Colorado Department of Transportation
CDOT
1420 Second Street
Greeley, CO 80631
Phone: (970) 350-2126
FAX: (970) 350-2198
Region 4 PJG

As Constructed
No Revisions:
Revised:
Void:

30th STREET TRANSPORTATION PROJECTS
RETAINING WALLS
GENERAL INFORMATION

Designer: L. Thompson
Detailer: A. Pelster
Structure Numbers
Sheet Subset: WALLS
Subset Sheets: W1 of 27

Project No./Code
AQC M110-047
STU M110-053
AQC M110-055

Sheet Number 306

12/8/2009 10:43:42 AM

SUMMARY OF QUANTITIES

ITEM NO.	DESCRIPTION	UNIT	WALL 1 (1)	WALL 2	WALL 3	WALL 4	WALL 5	WALL 6	WALL 7	WALL 8	WALL 9	ROCK WALLS	TOTAL
202	REMOVAL OF PORTIONS OF PRESENT STRUCTURE	LS										1	1
206	STRUCTURE EXCAVATION	CY	38	50	197	49	78	27	72	228	347		1086
206	STRUCTURE BACKFILL (CLASS 1)	CY	6	41	210	30	268	8	82	227	256		1128
206	STRUCTURE BACKFILL (CLASS 2)	CY	17	5	20	8	16		6		33		105
206	SHORING (AREA 6)	LS							1				1
206	SHORING (AREA 7)	LS									1		1
210	REBUILD PORTIONS OF ROCK WALL	SF										315	315
503	DRILLED CAISSON (24 INCH)	LF	198	182	182	109			170		197		1038
503	DRILLED CAISSON (30 INCH)	LF	91		179		337				171		778
514	PEDESTRIAN RAILING (STEEL)	LF	74	40	91	33	88		55		171	207	759
601	CONCRETE CLASS D (WALL)	CY	26	15	41	10	46	20	17	48	69		292
601	PRECAST CONCRETE CAP	EA	1	1									2
601	STRUCTURAL CONCRETE COATING	SY	88	56	142	36	132	82	60	95	236		927
602	REINFORCING STEEL	LB	2833	1443	4413	1175	4612	1159	1901	6188	7379		31,103
606	BRIDGE RAIL TYPE 8 (SPECIAL)	LF		40									40

KEY NOTES

(1) QUANTITIES FOR WALL 1 INCLUDE ALL WALL TYPE F QUANTITIES. FOR MORE INFORMATION, SEE SHEETS W3, W4 AND W18.

(2) LIMITS OF DISTURBANCE BEHIND WALL DUE TO EXCAVATION SHALL NOT EXCEED 2'-0" FROM ℄ CAISSON.

NOTES

1. UNLESS SHOWN OTHERWISE IN THE PLANS, THIS DRAWING GIVES THE PAY LIMITS FOR STRUCTURE EXCAVATION AND STRUCTURE BACKFILL. THE CONTRACTOR MAY ELECT TO EXTEND THE STRUCTURE EXCAVATION AND STRUCTURE BACKFILL BEYOND THE LIMITS SHOWN HERE. ANY ADDITIONAL EXCAVATION OR BACKFILL BEYOND THESE LIMITS WILL NOT BE MEASURED NOR PAID FOR. STRUCTURE BACKFILL MATERIAL PLACED OUTSIDE OF THESE PAY LIMITS SHALL MEET THE REQUIREMENTS OF THE STRUCTURE BACKFILL MATERIAL SHOWN WITHIN THE PAY LIMITS: STRUCTURE BACKFILL (CLASS 2) OR (CLASS 1).
2. FOR PURPOSES OF QUANTITY CALCULATIONS, THESE TEMPLATES APPLY FROM END TO END OF WALL.

ABBREVIATIONS

O.G. ORIGINAL GROUND

P.S. PLANNED SUBGRADE

F.S. PLANNED FINISHED SURFACE

LEGEND

STRUCTURE EXCAVATION

UNCLASSIFIED EXCAVATION

STRUCTURE BACKFILL (CLASS 1)

STRUCTURE BACKFILL (CLASS 2)

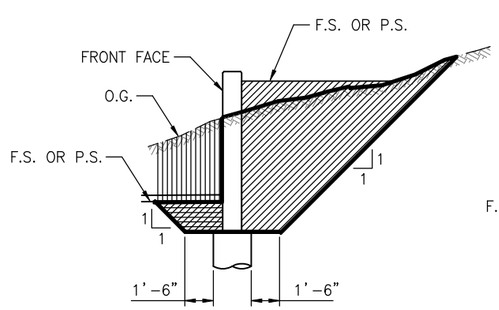

WALL TYPES A & C

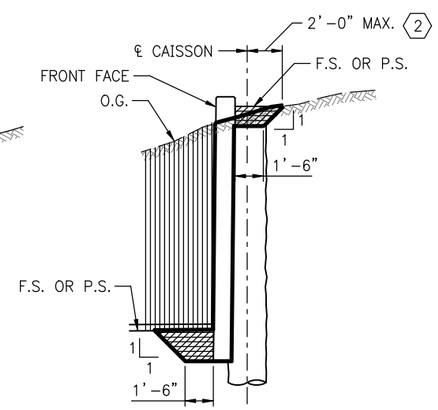

WALL TYPE B

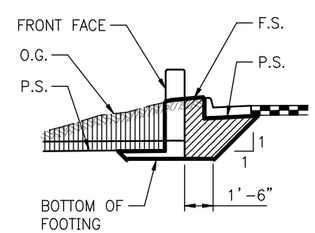

WALL TYPE D

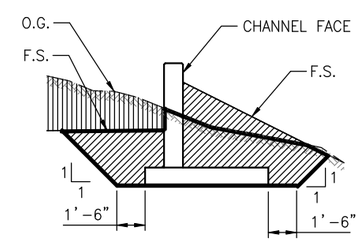

WALL TYPE E

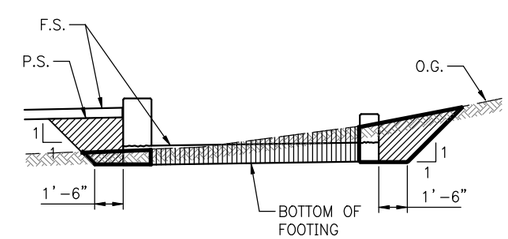

WALL TYPE F (1)

STRUCTURE EXCAVATION AND BACKFILL

TSIOUVARAS SIMMONS HOLDERNESS
CONSULTING ENGINEERS

12/8/2009 3:58:48 PM

Computer File Information		
Creation Date: 06-17-08	Initials: ARP	
Last Modification Date: 10-01-09	Initials: ARP	
Full Path: P:\070205D - 30th St\CAD\Sheets\		
File Name: 070205-W02-SummaryQuantities.dgn		
CAD Ver. MicroStation V8 Orig. Scale: NONE	Units: ENGLISH	

Sheet Revisions

CITY OF BOULDER PUBLIC WORKS DEPARTMENT

Colorado Department of Transportation
1420 Second Street
Greeley, CO 80631
Phone: (970) 350-2126
FAX: (970) 350-2198
Region 4 PJG

As Constructed
No Revisions:
Revised:
Void:

30th STREET TRANSPORTATION PROJECTS
RETAINING WALLS
SUMMARY OF QUANTITIES

Designer: L. Thompson
Detailer: A. Pelster
Structure Numbers
Sheet Subset: WALLS
Subset Sheets: W2 of 27

Project No./Code
AQC M110-047
STU M110-053
AQC M110-055

Sheet Number 307

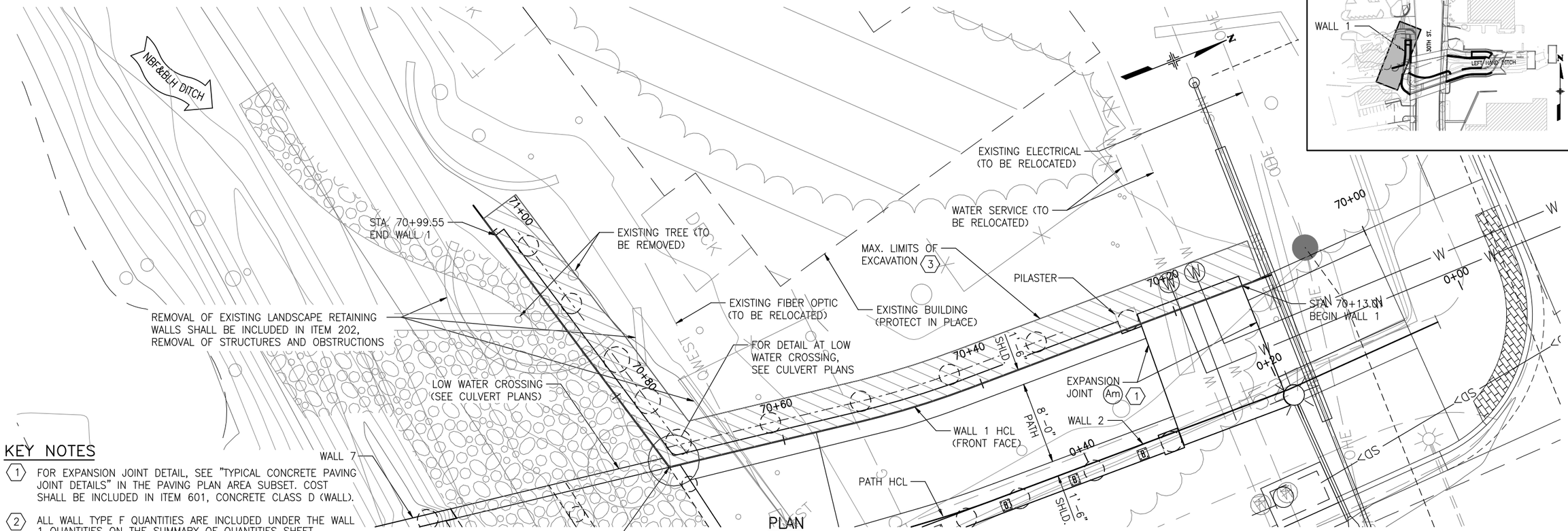

PLAN

(PEDESTRIAN RAILING AND TRASH RACK NOT SHOWN)
(ORIGINAL GROUND CONTOURS SHOWN)

KEY NOTES

1. FOR EXPANSION JOINT DETAIL, SEE "TYPICAL CONCRETE PAVING JOINT DETAILS" IN THE PAVING PLAN AREA SUBSET. COST SHALL BE INCLUDED IN ITEM 601, CONCRETE CLASS D (WALL).
2. ALL WALL TYPE F QUANTITIES ARE INCLUDED UNDER THE WALL 1 QUANTITIES ON THE SUMMARY OF QUANTITIES SHEET.
3. LIMITS OF DISTURBANCE BEHIND WALL DUE TO EXCAVATION SHALL NOT EXCEED 2'-0" FROM ℄ CAISSON.

NOTES

1. SEE CAISSON SUMMARY SHEETS FOR CAISSON LAYOUT INFORMATION.
2. CONTRACTOR SHALL COORDINATE CAISSON CONSTRUCTION WITH EXISTING AND RELOCATED UTILITIES.

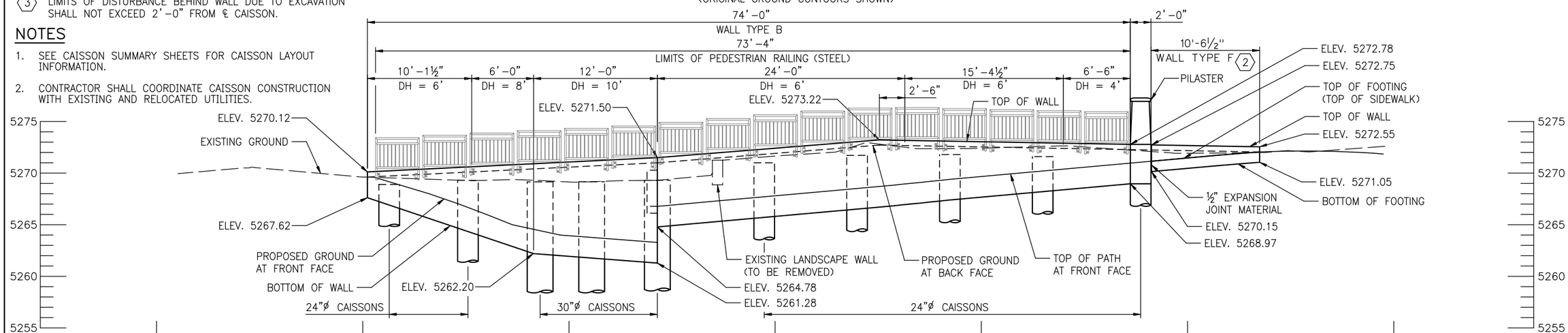

ELEVATION

(TAKEN AT WALL 1 HCL)
(TRASH RACK NOT SHOWN)

TSIOUVARAS SIMMONS HOLDERNESS
CONSULTING ENGINEERS

12/7/2009 1:13:43 PM

Computer File Information	
Creation Date: 05-30-08	Initials: ARP
Last Modification Date: 09-28-09	Initials: PMH
Full Path:	p:\070205d - 30th st\cad\sheets\
File Name:	070205-W03-Wall1General Layout.dgn
CAD Ver. MicroStation V8 Orig. Scale: 1" = 10'	Units: ENGLISH

Sheet Revisions

CITY OF BOULDER PUBLIC WORKS DEPARTMENT

Colorado Department of Transportation
1420 Second Street
Greeley, CO 80631
Phone: (970) 350-2126
FAX: (970) 350-2198
Region 4 PJG

As Constructed
No Revisions:
Revised:
Void:

30th STREET TRANSPORTATION PROJECTS
GENERAL LAYOUT
WALL 1

Designer: L. Thompson
Detailer: A. Pelster
Structure Numbers
Sheet Subset: WALLS
Subset Sheets: W3 of 27

Project No./Code
AQC M110-047
STU M110-053
AQC M110-055

Sheet Number 308

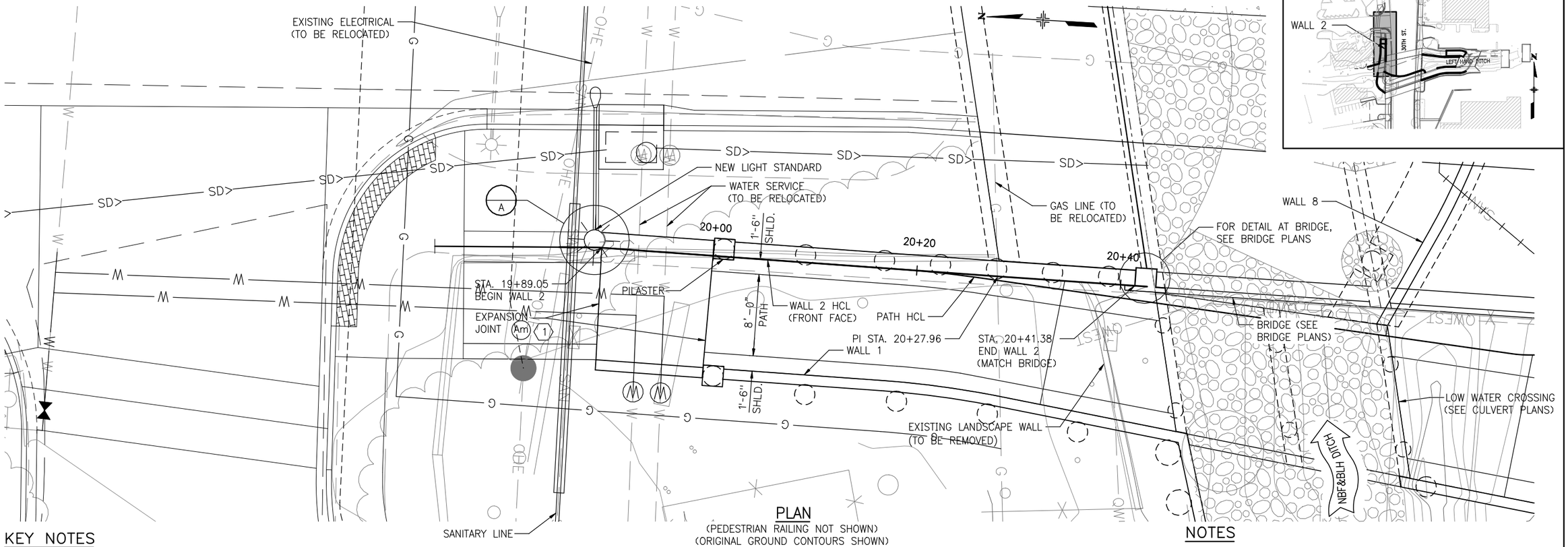

PLAN

(PEDESTRIAN RAILING NOT SHOWN)
(ORIGINAL GROUND CONTOURS SHOWN)

KEY NOTES

1. FOR EXPANSION JOINT DETAIL, SEE "TYPICAL CONCRETE PAVING JOINT DETAILS" IN THE PAVING PLAN AREA SUBSET. COST SHALL BE INCLUDED IN ITEM 601, CONCRETE CLASS D (WALL).
2. ALL WALL TYPE F QUANTITIES ARE INCLUDED UNDER THE WALL 1 QUANTITIES ON THE SUMMARY OF QUANTITIES SHEET.

NOTES

1. SEE CAISSON SUMMARY SHEETS FOR CAISSON LAYOUT INFORMATION.
2. CONTRACTOR SHALL COORDINATE CAISSON CONSTRUCTION WITH EXISTING AND RELOCATED UTILITIES.

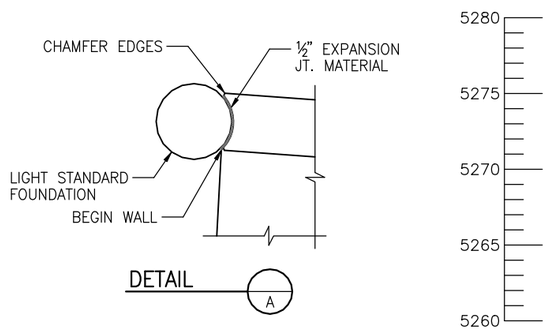

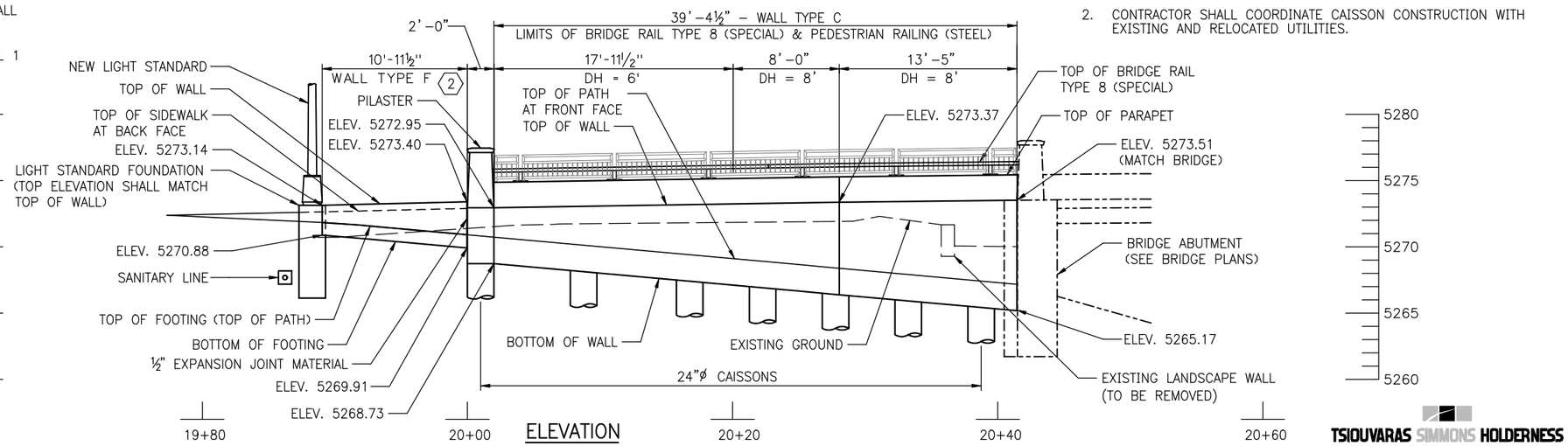

ELEVATION

(TAKEN AT WALL 2 HCL)

TSIOUVARAS SIMMONS HOLDERNESS
CONSULTING ENGINEERS

Computer File Information		
Creation Date: 05-30-08	Initials: ARP	
Last Modification Date: 09-25-09	Initials: PMH	
Full Path: p:\070205d – 30th st\cad\sheets\		
File Name: 070205-W04-Wall2General Layout.dgn		
CAD Ver. MicroStation V8 Orig. Scale: 1" = 10'	Units: ENGLISH	

Sheet Revisions

CITY OF BOULDER PUBLIC WORKS DEPARTMENT

Colorado Department of Transportation
DOT
1420 Second Street
Greeley, CO 80631
Phone: (970) 350-2126
FAX: (970) 350-2198
Region 4 PJG

As Constructed
No Revisions:
Revised:
Void:

30th STREET TRANSPORTATION PROJECTS
GENERAL LAYOUT
WALL 2

Designer: J. Simmons
Detailer: A. Pelster
Structure Numbers
Sheet Subset: WALLS
Subset Sheets: W4 of 27

Project No./Code
AQC M110-047
STU M110-053
AQC M110-055

Sheet Number 309

12/7/2009 1:13:51 PM

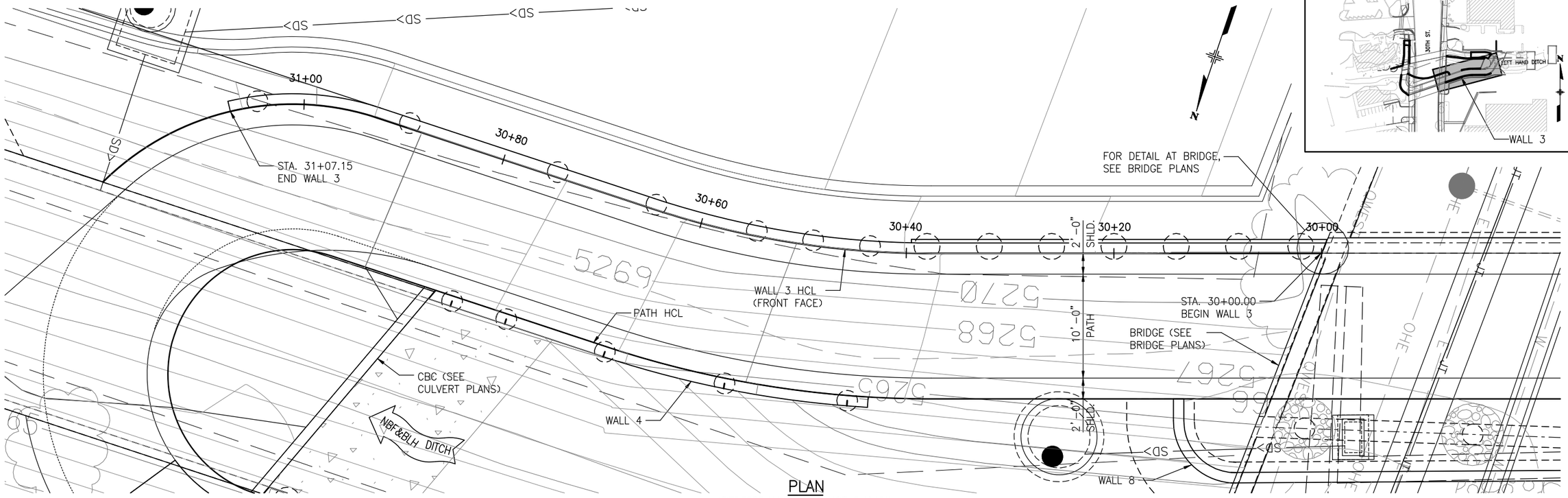

PLAN

(PEDESTRIAN RAILING NOT SHOWN)
(ORIGINAL GROUND CONTOURS SHOWN)

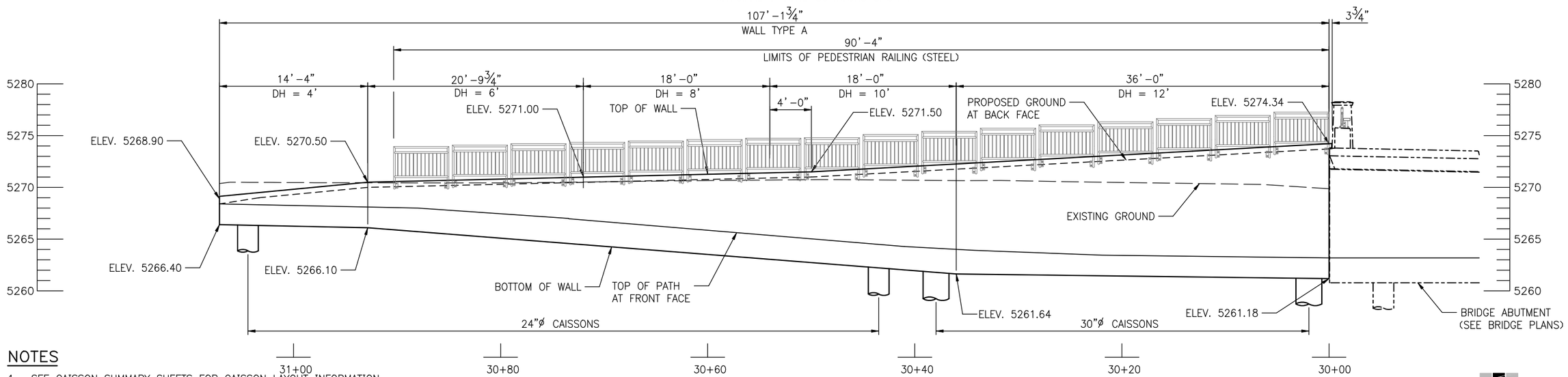

ELEVATION

(TAKEN AT WALL 3 HCL)

NOTES

1. SEE CAISSON SUMMARY SHEETS FOR CAISSON LAYOUT INFORMATION.
2. CONTRACTOR SHALL COORDINATE CAISSON CONSTRUCTION WITH EXISTING AND RELOCATED UTILITIES.

TSIOUVARAS SIMMONS HOLDERNESS
CONSULTING ENGINEERS

Computer File Information		
Creation Date: 05-30-08	Initials: ARP	
Last Modification Date: 09-25-09	Initials: PMH	
Full Path: p:\070205d - 30th st\cad\sheets\		
File Name: 070205-W05-Wall3General Layout.dgn		
CAD Ver. MicroStation V8 Orig. Scale: 1" = 10'	Units: ENGLISH	

Sheet Revisions

CITY OF BOULDER PUBLIC WORKS DEPARTMENT

Colorado Department of Transportation
1420 Second Street
Greeley, CO 80631
Phone: (970) 350-2126
FAX: (970) 350-2198
Region 4 PJG

As Constructed
No Revisions:
Revised:
Void:

30th STREET TRANSPORTATION PROJECTS
GENERAL LAYOUT
WALL 3

Designer: L. Thompson
Detailer: A. Pelster
Structure Numbers
Sheet Subset: WALLS
Subset Sheets: W5 of 27

Project No./Code
AQC M110-047
STU M110-053
AQC M110-055

Sheet Number 310

12/7/2009 1:13:57 PM

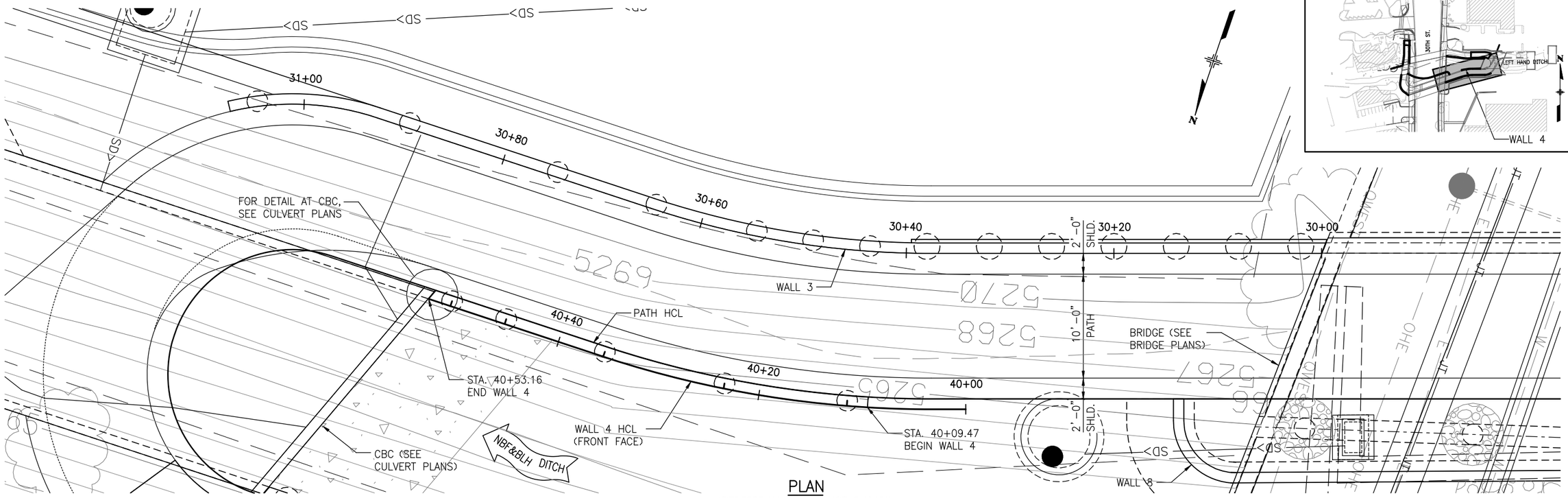

PLAN

(PEDESTRIAN RAILING NOT SHOWN)
(ORIGINAL GROUND CONTOURS SHOWN)

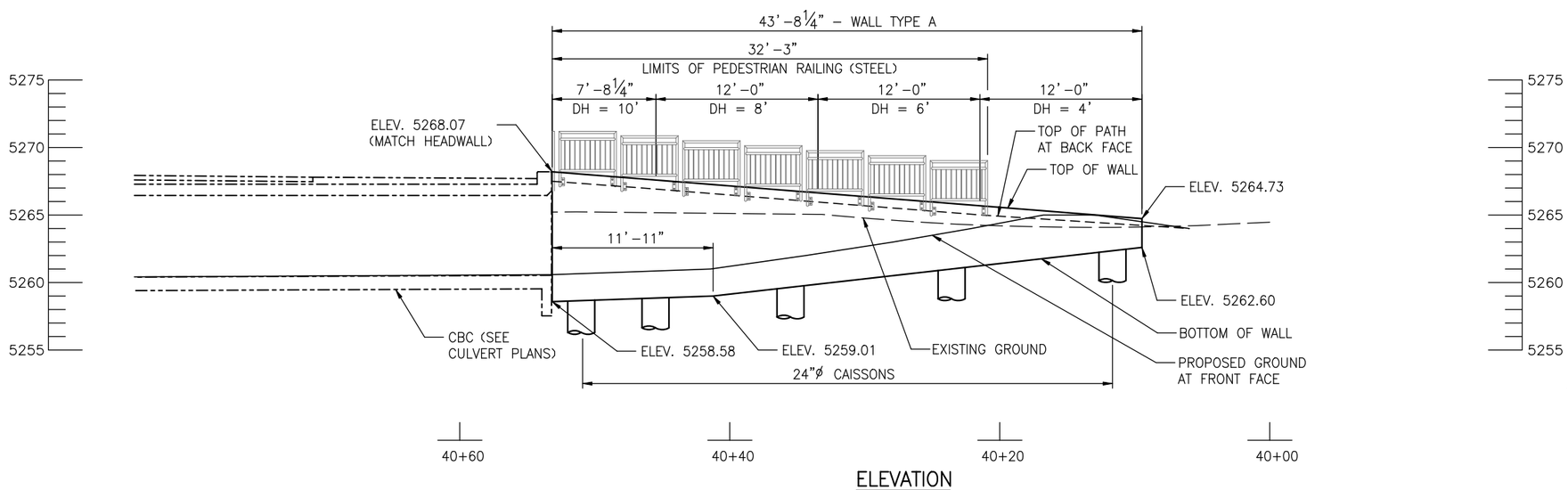

ELEVATION

(TAKEN AT WALL 4 HCL)

NOTES

1. SEE CAISSON SUMMARY SHEETS FOR CAISSON LAYOUT INFORMATION.
2. CONTRACTOR SHALL COORDINATE CAISSON CONSTRUCTION WITH EXISTING AND RELOCATED UTILITIES.

TSIOUVARAS SIMMONS HOLDERNESS
CONSULTING ENGINEERS

Computer File Information		
Creation Date: 05-30-08	Initials: ARP	
Last Modification Date: 09-30-09	Initials: ARP	
Full Path: p:\070205d – 30th st\cad\sheets\		
File Name: 070205-W06-Wall4General Layout.dgn		
CAD Ver. MicroStation V8 Orig. Scale: 1" = 10'	Units: ENGLISH	

Sheet Revisions

CITY OF BOULDER PUBLIC WORKS DEPARTMENT

Colorado Department of Transportation
1420 Second Street
Greeley, CO 80631
Phone: (970) 350-2126
FAX: (970) 350-2198
Region 4 PJG

As Constructed
No Revisions:
Revised:
Void:

30th STREET TRANSPORTATION PROJECTS
GENERAL LAYOUT
WALL 4

Designer: L. Thompson
Detailer: A. Pelster
Structure Numbers
Sheet Subset: WALLS
Subset Sheets: W6 of 27

Project No./Code
AQC M110-047
STU M110-053
AQC M110-055

Sheet Number 311

12/7/2009 1:14:02 PM

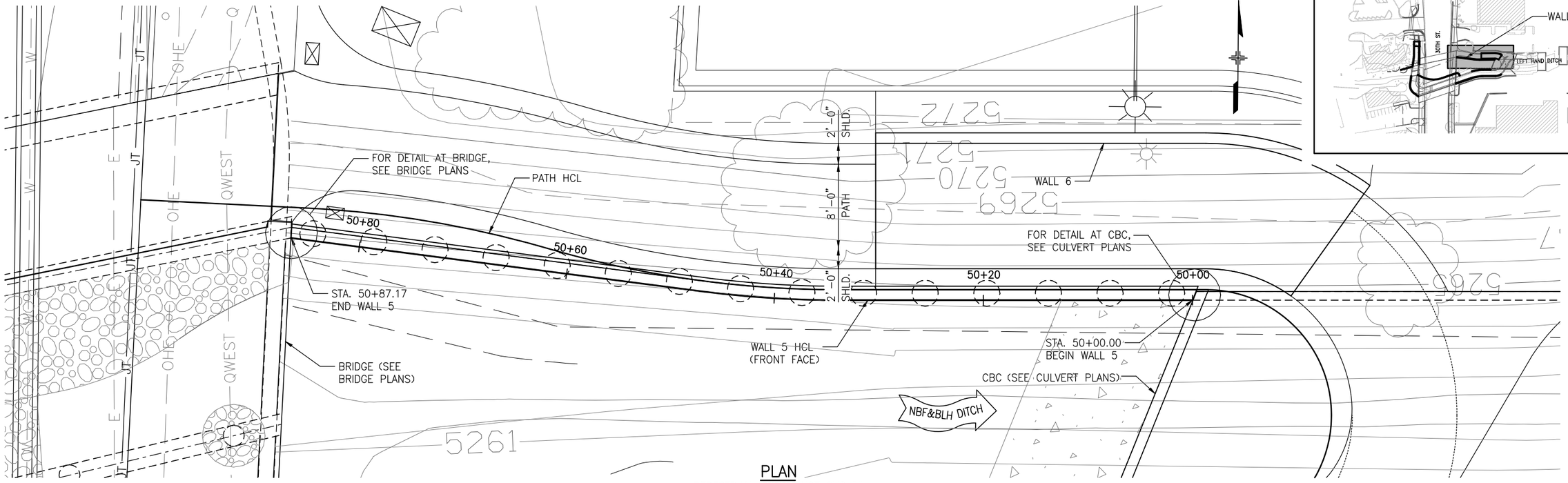

PLAN

(PEDESTRIAN RAILING NOT SHOWN)
(ORIGINAL GROUND CONTOURS SHOWN)

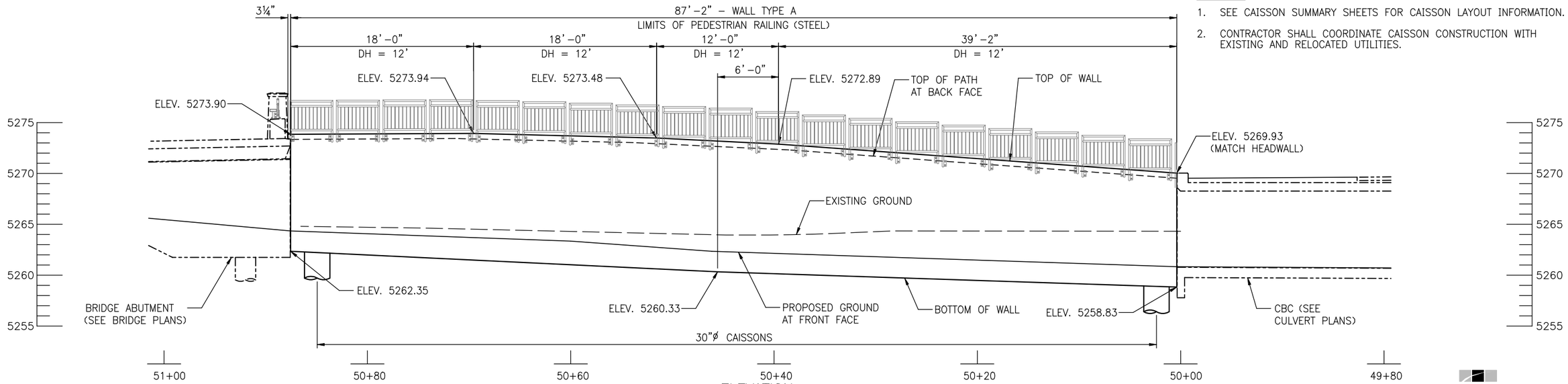

ELEVATION

(TAKEN AT WALL 5 HCL)

NOTES

1. SEE CAISSON SUMMARY SHEETS FOR CAISSON LAYOUT INFORMATION.
2. CONTRACTOR SHALL COORDINATE CAISSON CONSTRUCTION WITH EXISTING AND RELOCATED UTILITIES.

TSIOUVARAS SIMMONS HOLDERNESS
CONSULTING ENGINEERS

Computer File Information		
Creation Date: 05-30-08	Initials: ARP	
Last Modification Date: 09-25-09	Initials: PMH	
Full Path: p:\070205d – 30th st\cad\sheets\		
File Name: 070205-W07-Wall5General Layout.dgn		
CAD Ver. MicroStation V8 Orig. Scale: 1" = 10'	Units: ENGLISH	

Sheet Revisions

CITY OF BOULDER PUBLIC WORKS DEPARTMENT

Colorado Department of Transportation
CDOT
1420 Second Street
Greeley, CO 80631
Phone: (970) 350-2126
FAX: (970) 350-2198
Region 4 PJG

As Constructed
No Revisions:
Revised:
Void:

30th STREET TRANSPORTATION PROJECTS
GENERAL LAYOUT
WALL 5

Designer: L. Thompson
Detailer: A. Pelster
Structure Numbers
Sheet Subset: WALLS
Subset Sheets: W7 of 27

Project No./Code
AQC M110-047
STU M110-053
AQC M110-055

Sheet Number 312

12/7/2009 1:14:08 PM

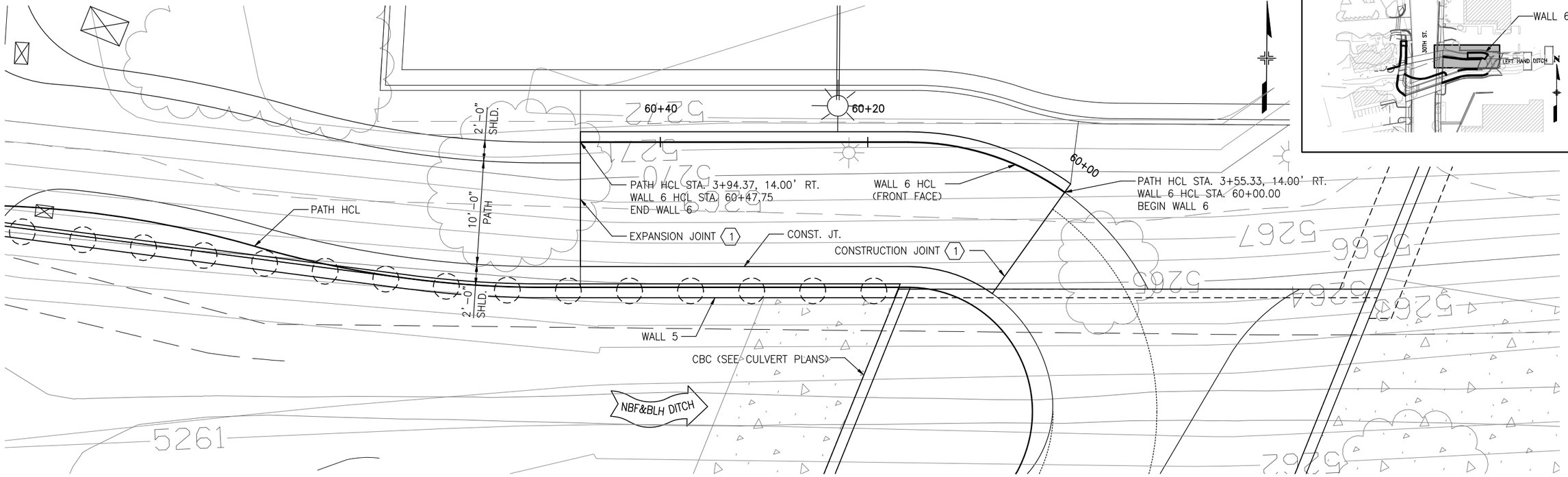

PLAN

(ORIGINAL GROUND CONTOURS SHOWN)

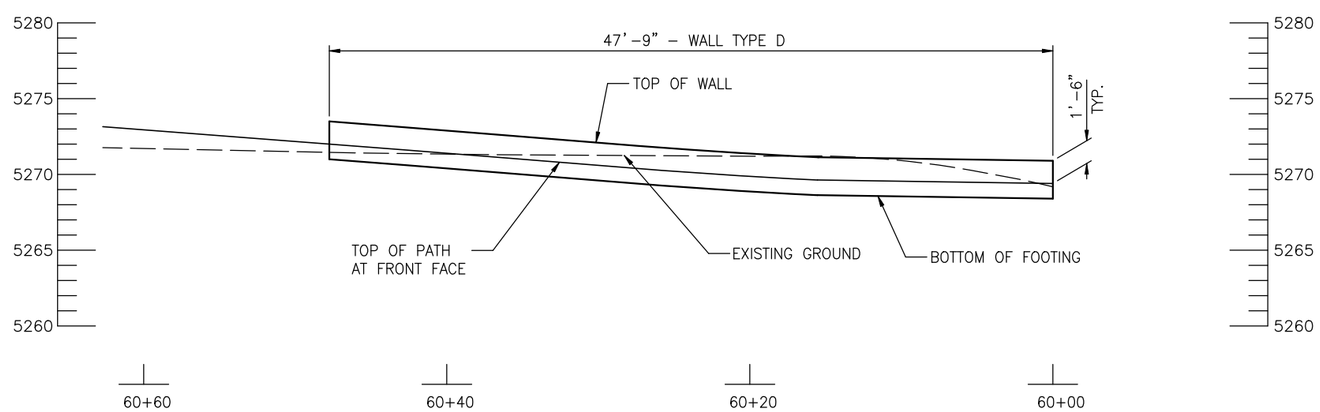

ELEVATION

(TAKEN AT WALL 6 HCL)

KEY NOTES

1. FOR PATH JOINT DETAILS, SEE "TYPICAL ROADWAY & PATH DETAILS" SHEETS.

NOTES

1. FOR PATH PROFILE GRADE AND CROSS SLOPE INFORMATION, SEE PATH SUBSET.

TSIOUVARAS SIMMONS HOLDERNESS
CONSULTING ENGINEERS

Computer File Information		
Creation Date: 07-08-08	Initials: ARP	
Last Modification Date: 09-25-09	Initials: PMH	
Full Path: p:\070205d – 30th st\cad\sheets\		
File Name: 070205-W08-Wall6General Layout.dgn		
CAD Ver. MicroStation V8 Orig. Scale: 1" = 10'	Units: ENGLISH	

Sheet Revisions

CITY OF BOULDER • PUBLIC WORKS DEPARTMENT

Colorado Department of Transportation
CDOT
1420 Second Street
Greeley, CO 80631
Phone: (970) 350-2126
FAX: (970) 350-2198
Region 4 PJG

As Constructed
No Revisions:
Revised:
Void:

30th STREET TRANSPORTATION PROJECTS
GENERAL LAYOUT
WALL 6

Designer: J. Simmons
Detailer: A. Pelster
Structure Numbers
Sheet Subset: WALLS
Subset Sheets: W8 of 27

Project No./Code
AQC M110-047
STU M110-053
AQC M110-055

Sheet Number 313

12/7/2009 1:14:14 PM

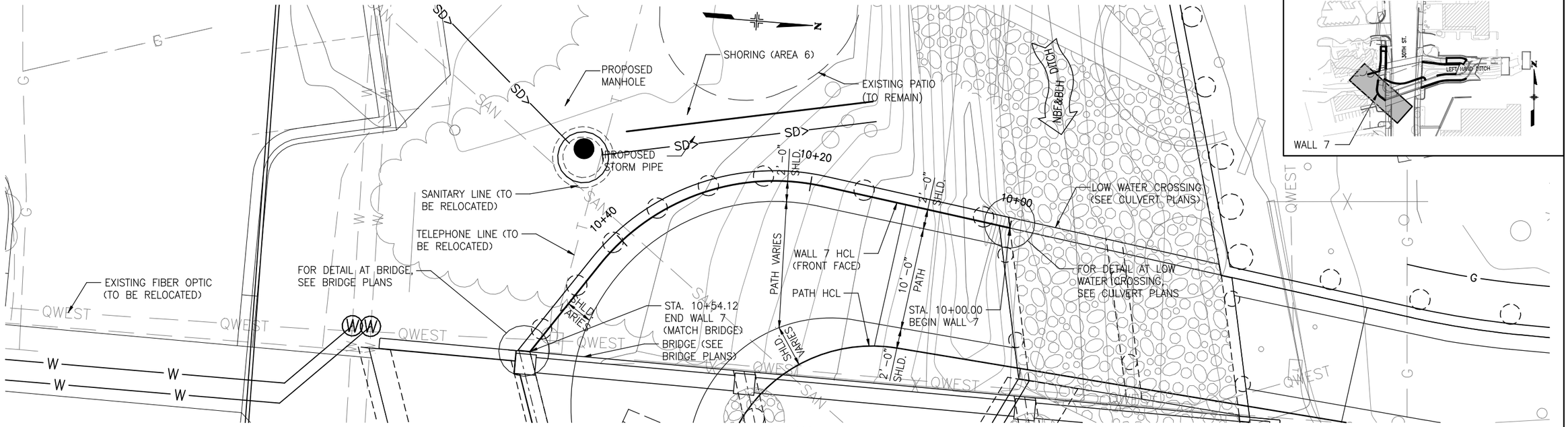

PLAN

(PEDESTRIAN RAILING NOT SHOWN)
(ORIGINAL GROUND CONTOURS SHOWN)

NOTES

1. SEE CAISSON SUMMARY SHEETS FOR CAISSON LAYOUT INFORMATION.
2. CONTRACTOR SHALL COORDINATE CAISSON CONSTRUCTION WITH EXISTING AND RELOCATED UTILITIES.

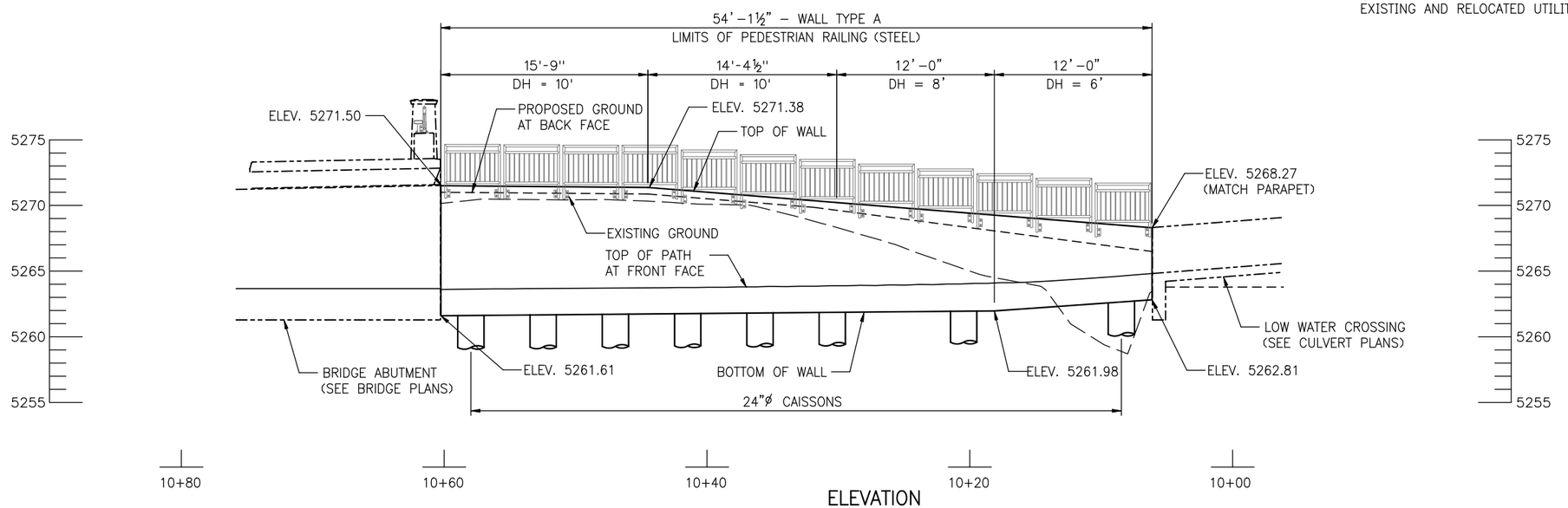

ELEVATION

(TAKEN AT WALL 7 HCL)

TSIOUVARAS SIMMONS HOLDERNESS
CONSULTING ENGINEERS

Computer File Information		
Creation Date: 07-08-08	Initials: ARP	
Last Modification Date: 09-25-09	Initials: PMH	
Full Path:	p:\070205d – 30th st\cad\sheets\	
File Name:	070205-W09-Wall7General Layout.dgn	
CAD Ver. MicroStation V8 Orig. Scale: 1" = 10'	Units: ENGLISH	

Sheet Revisions

CITY OF BOULDER PUBLIC WORKS DEPARTMENT

Colorado Department of Transportation
DOT
1420 Second Street
Greeley, CO 80631
Phone: (970) 350-2126
FAX: (970) 350-2198
Region 4 PJG

As Constructed
No Revisions:
Revised:
Void:

30th STREET TRANSPORTATION PROJECTS
GENERAL LAYOUT
WALL 7

Designer: L. Thompson
Detailer: A. Pelster
Structure Numbers
Sheet Subset: WALLS
Subset Sheets: W9 of 27

Project No./Code
AQC M110-047
STU M110-053
AQC M110-055

Sheet Number 314

12/7/2009 1:14:19 PM

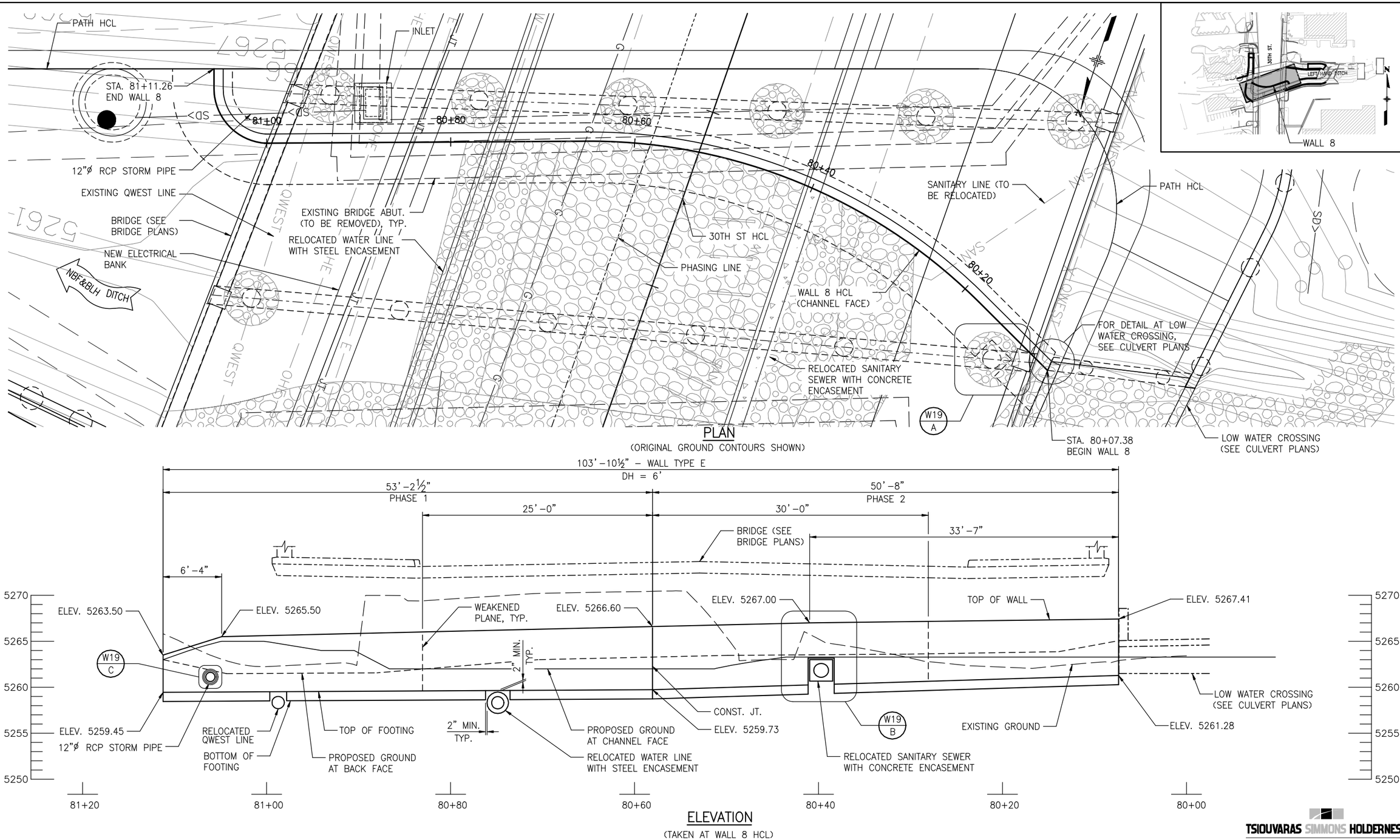

TSIOUVARAS SIMMONS HOLDERNESS
CONSULTING ENGINEERS

Computer File Information		
Creation Date:	07-08-08	Initials: ARP
Last Modification Date:	9-29-09	Initials: PMH
Full Path:	p:\070205d - 30th st\cad\sheets\	
File Name:	070205-W10-Wall8General Layout.dgn	
CAD Ver. MicroStation V8	Orig. Scale: 1" = 10'	Units: ENGLISH

Sheet Revisions

CITY OF BOULDER PUBLIC WORKS DEPARTMENT

Colorado Department of Transportation
CDOT
1420 Second Street
Greeley, CO 80631
Phone: (970) 350-2126
FAX: (970) 350-2198
Region 4 PJG

As Constructed
No Revisions:
Revised:
Void:

30th STREET TRANSPORTATION PROJECTS
GENERAL LAYOUT
WALL 8

Designer: J. Simmons
Detailer: A. Pelster
Structure Numbers
Sheet Subset: WALLS
Subset Sheets: W10 of 27

Project No./Code
AQC M110-047
STU M110-053
AQC M110-055

Sheet Number 315

12/7/2009 1:14:25 PM

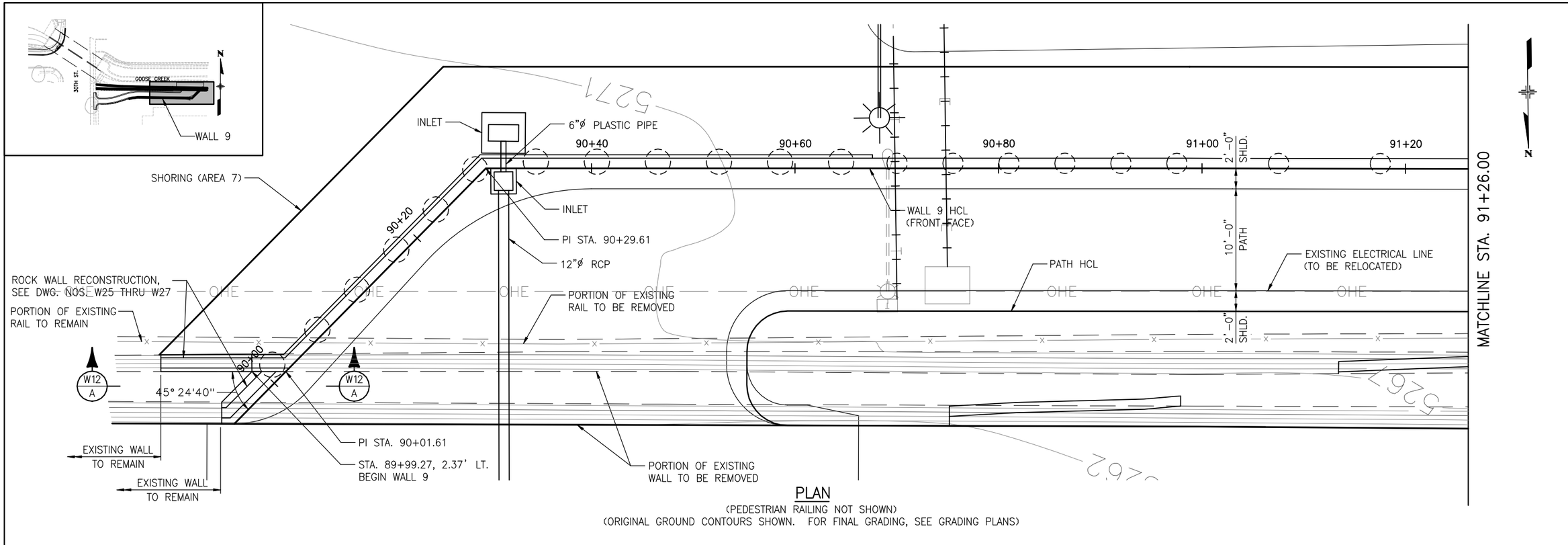

PLAN

(PEDESTRIAN RAILING NOT SHOWN)
(ORIGINAL GROUND CONTOURS SHOWN. FOR FINAL GRADING, SEE GRADING PLANS)

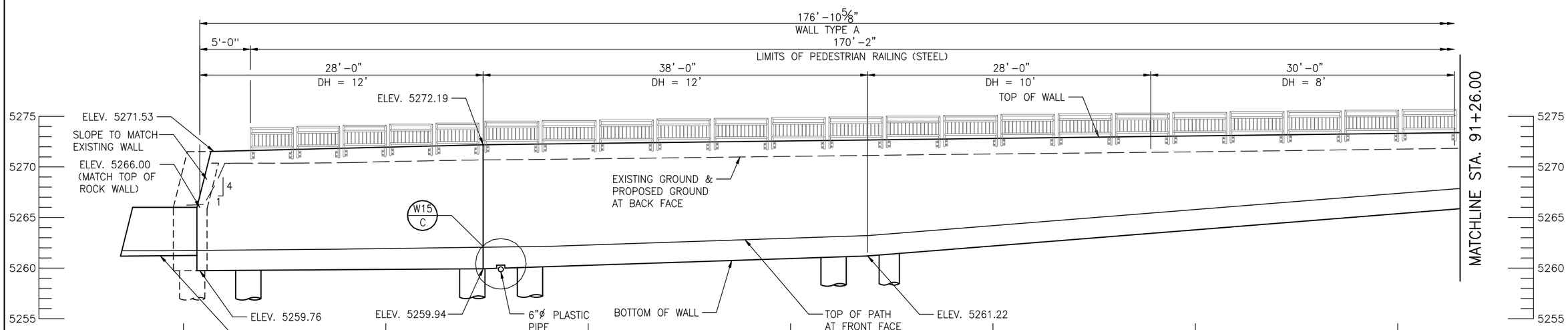

ELEVATION

(TAKEN AT WALL 9 HCL)
(CAISSONS NOT SHOWN)

TSIOUVARAS SIMMONS HOLDERNESS
CONSULTING ENGINEERS

12/7/2009 1:14:31 PM

Computer File Information		
Creation Date: 07-09-08	Initials: ARP	
Last Modification Date: 09-25-09	Initials: PMH	
Full Path: p:\070205d - 30th st\cad\sheets\		
File Name: 070205-W11-Wall9General Layout 01.dgn		
CAD Ver. MicroStation V8 Orig. Scale: 1" = 10'	Units: ENGLISH	

Sheet Revisions

CITY OF BOULDER PUBLIC WORKS DEPARTMENT

Colorado Department of Transportation
DOT
1420 Second Street
Greeley, CO 80631
Phone: (970) 350-2126
FAX: (970) 350-2198
Region 4 PJG

As Constructed
No Revisions:
Revised:
Void:

30th STREET TRANSPORTATION PROJECTS
GENERAL LAYOUT
WALL 9 (1 OF 2)

Designer: L. Thompson
Detailer: A. Pelster
Structure Numbers
Sheet Subset: WALLS
Subset Sheets: W11 of 27

Project No./Code
AQC M110-047
STU M110-053
AQC M110-055

Sheet Number 316

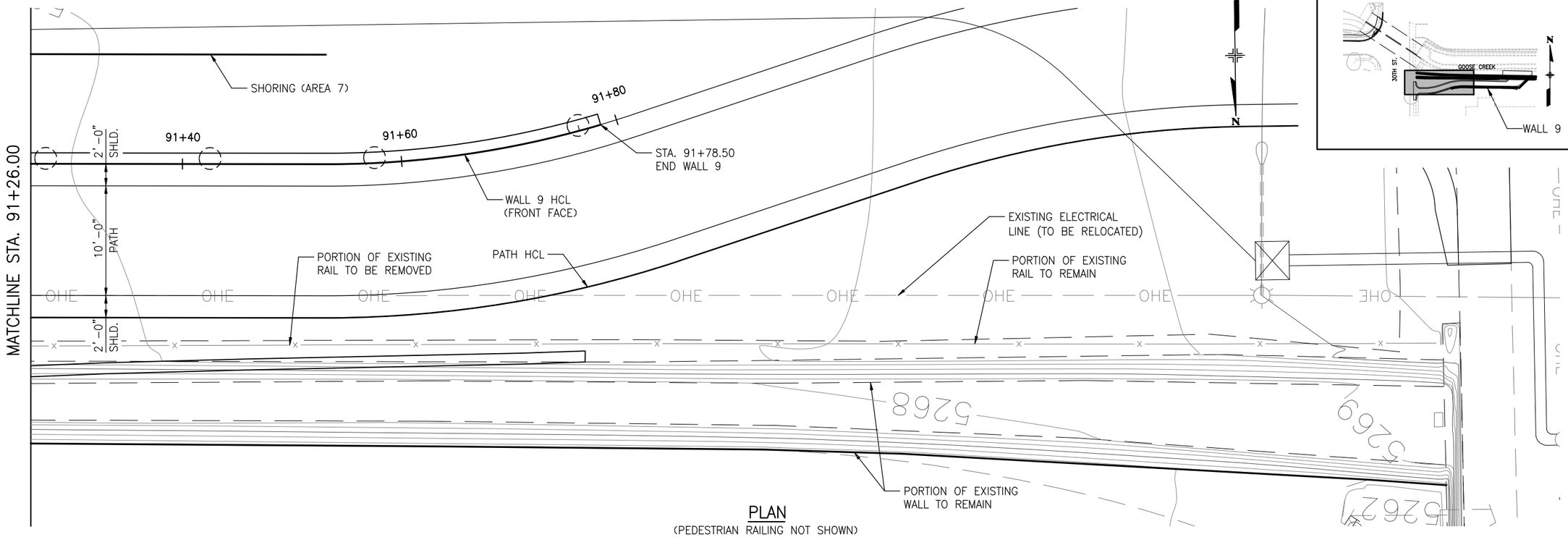

PLAN

(PEDESTRIAN RAILING NOT SHOWN)
(ORIGINAL GROUND CONTOURS SHOWN. FOR FINAL GRADING, SEE GRADING PLANS)

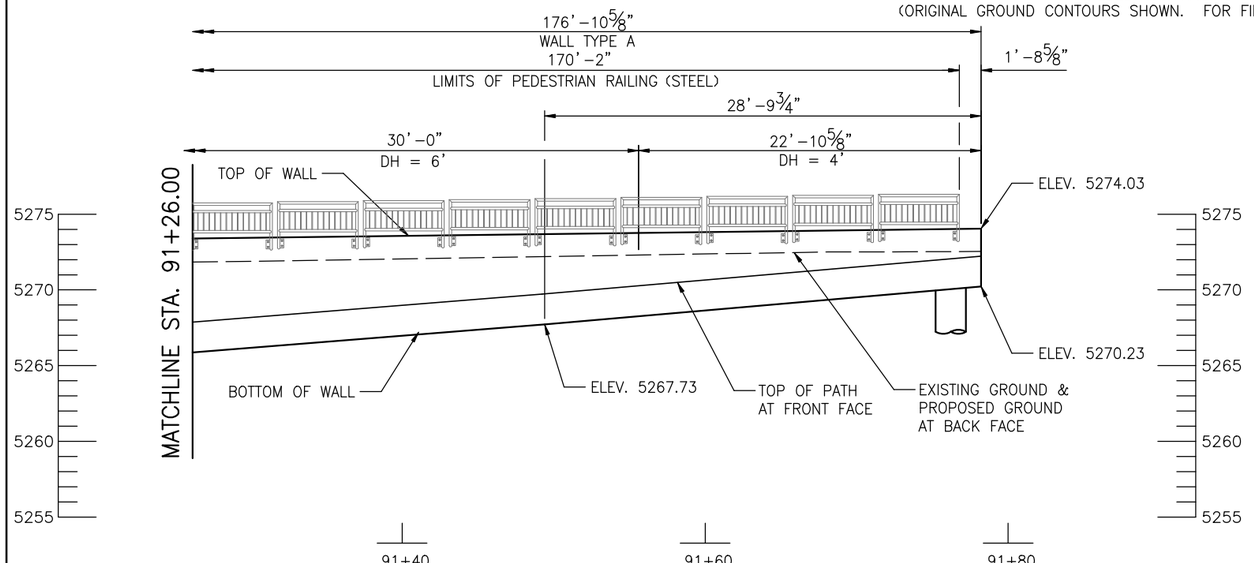

ELEVATION

(TAKEN AT WALL 9 HCL)
(CAISSONS NOT SHOWN)

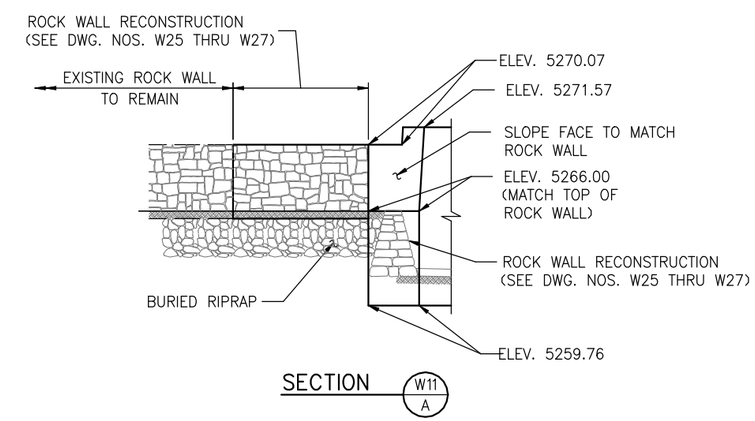

SECTION W11 A

TSIOUVARAS SIMMONS HOLDERNESS
CONSULTING ENGINEERS

12/7/2009 1:14:36 PM

Computer File Information		
Creation Date: 07-09-08	Initials: ARP	
Last Modification Date: 09-25-09	Initials: PMH	
Full Path: p:\070205d - 30th st\cad\sheets\		
File Name: 070205-W12-Wall9General Layout 02.dgn		
CAD Ver. MicroStation V8 Orig. Scale: 1" = 10'	Units: ENGLISH	

Sheet Revisions

CITY OF BOULDER PUBLIC WORKS DEPARTMENT

Colorado Department of Transportation
CDOT
1420 Second Street
Greeley, CO 80631
Phone: (970) 350-2126
FAX: (970) 350-2198
Region 4 PJG

As Constructed
No Revisions:
Revised:
Void:

30th STREET TRANSPORTATION PROJECTS
GENERAL LAYOUT
WALL 9 (2 OF 2)

Designer: L. Thompson
Detailer: A. Pelster
Structure Numbers
Sheet Subset: WALLS
Subset Sheets: W12 of 27

Project No./Code
AQC M110-047
STU M110-053
AQC M110-055

Sheet Number 317

CAISSON SUMMARY – WALL 1

WALL STATION	OFFSET (FT.)	CAISSON DIAMETER (IN.)	ESTIMATED TOP OF CAISSON ELEV. (1)	ESTIMATED BEDROCK ELEV.	MIN. PENETRATION INTO BEDRCOK (FT.)	ESTIMATED TIP ELEVATION	ESTIMATED LENGTH (FT.)
70+24.55	0.75, RT.	24	5268.97	5248.00	5	5243.00	25.97
70+33.65	1.92, RT.	24	5271.61	5248.00	6	5242.00	29.61
70+42.67	1.92, RT.	24	5271.81	5248.00	6	5242.00	29.81
70+51.88	1.92, RT.	24	5271.72	5248.00	6	5242.00	29.72
70+60.89	1.92, RT.	24	5271.00	5248.00	6	5242.00	29.00
70+72.84	2.17, RT.	30	5269.31	5248.00	9	5239.00	30.31
70+77.84	2.17, RT.	30	5269.17	5248.00	9	5239.00	30.17
70+82.84	2.17, RT.	30	5269.16	5248.00	9	5239.00	30.16
70+89.84	1.92, RT.	24	5269.30	5248.00	6	5242.00	27.30
70+96.84	1.92, RT.	24	5268.91	5248.00	6	5242.00	26.91

CAISSON SUMMARY – WALL 2

WALL STATION	OFFSET (FT.)	CAISSON DIAMETER (IN.)	TOP OF CAISSON ELEV.	ESTIMATED BEDROCK ELEV.	MIN. PENETRATION INTO BEDRCOK (FT.)	ESTIMATED TIP ELEVATION	ESTIMATED LENGTH (FT.)
20+01.01	0.75, LT.	24	5268.73	5248.00	7	5241.00	27.73
20+09.01	0.75, LT.	24	5268.03	5248.00	7	5241.00	27.03
20+16.76	0.75, LT.	24	5267.31	5248.00	7	5241.00	26.31
20+22.26	0.75, LT.	24	5266.81	5248.00	7	5241.00	25.81
20+27.76	0.75, LT.	24	5266.32	5248.00	7	5241.00	25.32
20+33.26	0.75, LT.	24	5265.82	5248.00	7	5241.00	24.82
20+38.76	0.75, LT.	24	5265.33	5248.00	7	5241.00	24.33

CAISSON SUMMARY – WALL 3

WALL STATION	OFFSET (FT.)	CAISSON DIAMETER (IN.)	TOP OF CAISSON ELEV.	ESTIMATED BEDROCK ELEV.	MIN. PENETRATION INTO BEDRCOK (FT.)	ESTIMATED TIP ELEVATION	ESTIMATED LENGTH (FT.)
30+02.00	0.67, RT.	30	5261.21	5245.00	9	5236.00	25.21
30+08.00	0.67, RT.	30	5261.28	5245.00	9	5236.00	25.28
30+14.00	0.67, RT.	30	5261.36	5245.00	9	5236.00	25.36
30+20.00	0.67, RT.	30	5261.44	5245.00	9	5236.00	25.44
30+26.00	0.67, RT.	30	5261.51	5245.00	9	5236.00	25.51
30+32.00	0.67, RT.	30	5261.59	5245.00	9	5236.00	25.59
30+38.00	0.67, RT.	30	5261.80	5245.00	9	5236.00	25.80
30+43.53	0.50, RT.	24	5262.23	5245.00	7	5238.00	24.23
30+49.06	0.50, RT.	24	5262.67	5245.00	7	5238.00	24.67
30+54.59	0.50, RT.	24	5263.10	5245.00	7	5238.00	25.10
30+64.65	0.50, RT.	24	5263.89	5245.00	7	5238.00	25.89
30+74.66	0.50, RT.	24	5264.67	5245.00	7	5238.00	26.67
30+89.66	0.50, RT.	24	5265.85	5245.00	7	5238.00	27.85
31+04.43	0.50, RT.	24	5266.34	5245.00	6	5239.00	27.34

CAISSON SUMMARY – WALL 4

WALL STATION	OFFSET (FT.)	CAISSON DIAMETER (IN.)	TOP OF CAISSON ELEV.	ESTIMATED BEDROCK ELEV.	MIN. PENETRATION INTO BEDRCOK (FT.)	ESTIMATED TIP ELEVATION	ESTIMATED LENGTH (FT.)
40+11.47	0.50, RT.	24	5262.24	5245.00	6	5239.00	23.24
40+23.46	0.50, RT.	24	5260.89	5245.00	7	5238.00	22.89
40+35.45	0.50, RT.	24	5259.54	5245.00	7	5238.00	21.54
40+45.45	0.50, RT.	24	5258.82	5245.00	7	5238.00	20.82
40+50.95	0.50, RT.	24	5258.62	5245.00	7	5238.00	20.62

NOTES

1. PORTIONS OF EXISTING STRUCTURES AND TREE ROOT SYSTEMS ENCOUNTERED DURING CONSTRUCTION OF THE NEW FOUNDATION SHALL BE REMOVED AS NECESSARY TO INSTALL THE NEW FOUNDATION. METHOD OF REMOVAL OF PORTIONS OF EXISTING STRUCTURES AND REPLACEMENT OF DISTURBED SUBGRADE SHALL BE APPROVED BY THE ENGINEER PRIOR TO CONSTRUCTION OF THE NEW FOUNDATION. REMOVAL OF EXISTING BRIDGE SHALL BE INCLUDED IN ITEM 202, REMOVAL OF BRIDGE.
2. CAISSON CONCRETE SHALL BE CONCRETE CLASS BZ.
3. REINFORCING PROJECTING INTO WALLS SHALL NOT BE PAID FOR SEPARATELY, BUT SHALL BE INCLUDED IN THE COST OF ITEM 503, DRILLED CAISSON.
4. BARS PROJECTING FROM TOP OF CAISSON SHALL BE PLACED TO FIT INSIDE THE REINFORCING CAGE OF THE WALL.
5. LAP SPLICES SHALL BE SECURELY TIED OR CLAMPED. CONTRACTOR SHALL BE RESPONSIBLE FOR ASSEMBLING AND SUPPORTING THE REINFORCING CAGE TO SAFELY RESIST ALL LOADS IMPOSED DURING HANDLING AND CONCRETE PLACEMENT.
6. THE BOTTOM OF THE CAISSON SHALL EXTEND TO THE MINIMUM PENETRATION SHOWN IN THE "CAISSON SUMMARY". THE ACTUAL TIP ELEVATION MAY BE HIGHER OR LOWER THAN THE ESTIMATED ELEVATION.
7. THE CONTRACTOR SHALL ANTICIPATE ENCOUNTERING COBBLES DURING CONSTRUCTION OF THE CAISSONS. FOR GEOTECHNICAL DATA, SEE GEOTECHNICAL SUBSET.

KEY NOTES

(1) WALL 1 TOP OF CAISSON ELEVATIONS MAY BE ADJUSTED BASED ON FIELD CONDITIONS. TOP OF CAISSON ELEVATIONS SHALL MEET THE CRITERIA SHOWN ON WALL TYPE B DETAILS SHEET.

TSIOUVARAS SIMMONS HOLDERNESS
CONSULTING ENGINEERS

12/7/2009 1:14:39 PM

Computer File Information	
Creation Date: 07-13-08	Initials: ARP
Last Modification Date: 10-01-09	Initials: PMH
Full Path:	p:\070205d – 30th st\cad\sheets\
File Name:	070205-W13-CaissonData01.dgn
CAD Ver. MicroStation V8 Orig. Scale: NONE	Units: ENGLISH

Sheet Revisions

CITY OF BOULDER PUBLIC WORKS DEPARTMENT

Colorado Department of Transportation
CDOT
1420 Second Street
Greeley, CO 80631
Phone: (970) 350-2126
FAX: (970) 350-2198
Region 4 PJG

As Constructed
No Revisions:
Revised:
Void:

30th STREET TRANSPORTATION PROJECTS
RETAINING WALLS
CAISSON SUMMARY (1 OF 2)

Designer: L. Thompson
Detailer: A. Pelster
Structure Numbers
Sheet Subset: WALLS
Subset Sheets: W13 of 27

Project No./Code
AQC M110-047
STU M110-053
AQC M110-055

Sheet Number 318

CAISSON SUMMARY – WALL 5

WALL STATION	OFFSET (FT.)	CAISSON DIAMETER (IN.)	TOP OF CAISSON ELEV.	ESTIMATED BEDROCK ELEV.	MIN. PENETRATION INTO BEDRCOK (FT.)	ESTIMATED TIP ELEVATION	ESTIMATED LENGTH (FT.)
50+02.00	0.67, LT.	30	5258.90	5247.00	9	5238.00	20.90
50+07.90	0.67, LT.	30	5259.09	5247.00	9	5238.00	21.09
50+13.79	0.67, LT.	30	5259.29	5247.00	9	5238.00	21.29
50+19.69	0.67, LT.	30	5259.48	5247.00	9	5238.00	21.48
50+25.59	0.67, LT.	30	5259.68	5247.00	9	5238.00	21.68
50+31.49	0.67, LT.	30	5259.88	5247.00	9	5238.00	21.88
50+37.38	0.67, LT.	30	5260.07	5247.00	9	5238.00	22.07
50+43.28	0.67, LT.	30	5260.27	5247.00	9	5238.00	22.27
50+49.18	0.67, LT.	30	5260.52	5247.00	9	5238.00	22.52
50+55.07	0.67, LT.	30	5260.81	5247.00	9	5238.00	22.81
50+60.97	0.67, LT.	30	5261.09	5247.00	9	5238.00	23.09
50+66.87	0.67, LT.	30	5261.37	5247.00	9	5238.00	23.37
50+72.77	0.67, LT.	30	5261.66	5247.00	9	5238.00	23.66
50+78.66	0.67, LT.	30	5261.94	5247.00	9	5238.00	23.94
50+84.56	0.67, LT.	30	5262.22	5247.00	9	5238.00	24.22

CAISSON SUMMARY – WALL 7

WALL STATION	OFFSET (FT.)	CAISSON DIAMETER (IN.)	TOP OF CAISSON ELEV.	ESTIMATED BEDROCK ELEV.	MIN. PENETRATION INTO BEDRCOK (FT.)	ESTIMATED TIP ELEVATION	ESTIMATED LENGTH (FT.)
10+02.75	0.50, RT.	24	5262.59	5248.00	7	5241.00	21.59
10+14.75	0.50, RT.	24	5261.95	5248.00	7	5241.00	20.95
10+24.62	0.50, RT.	24	5261.86	5248.00	7	5241.00	20.86
10+30.00	0.50, RT.	24	5261.81	5248.00	7	5241.00	20.81
10+35.38	0.50, RT.	24	5261.77	5248.00	7	5241.00	20.77
10+40.75	0.50, RT.	24	5261.72	5248.00	7	5241.00	20.72
10+46.20	0.50, RT.	24	5261.67	5248.00	7	5241.00	20.67
10+51.70	0.50, RT.	24	5261.62	5248.00	7	5241.00	20.62

CAISSON SUMMARY – WALL 9

WALL STATION	OFFSET (FT.)	CAISSON DIAMETER (IN.)	TOP OF CAISSON ELEV.	ESTIMATED BEDROCK ELEV.	MIN. PENETRATION INTO BEDRCOK (FT.)	ESTIMATED TIP ELEVATION	ESTIMATED LENGTH (FT.)
90+01.15	1.42, LT.	30	5259.76	5255.00	9	5246.00	13.76
90+06.70	0.67, LT.	30	5259.79	5255.00	9	5246.00	13.79
90+12.23	0.67, LT.	30	5259.83	5255.00	9	5246.00	13.83
90+17.76	0.67, LT.	30	5259.86	5255.00	9	5246.00	13.86
90+23.29	0.67, LT.	30	5259.90	5255.00	9	5246.00	13.90
90+28.82	0.67, LT.	30	5259.93	5255.00	9	5246.00	13.93
90+34.53	0.67, LT.	30	5260.11	5255.00	9	5246.00	14.11
90+40.53	0.67, LT.	30	5260.31	5255.00	9	5246.00	14.31
90+46.53	0.67, LT.	30	5260.51	5255.00	9	5246.00	14.51
90+52.53	0.67, LT.	30	5260.71	5255.00	9	5246.00	14.71
90+58.53	0.67, LT.	30	5260.91	5255.00	9	5246.00	14.91
90+64.53	0.67, LT.	30	5261.12	5255.00	9	5246.00	15.12
90+70.03	0.50, LT.	24	5261.40	5255.00	7	5248.00	13.40
90+75.53	0.50, LT.	24	5261.80	5255.00	7	5248.00	13.80
90+81.03	0.50, LT.	24	5262.21	5255.00	7	5248.00	14.21
90+86.53	0.50, LT.	24	5262.61	5255.00	7	5248.00	14.61
90+92.03	0.50, LT.	24	5263.01	5255.00	7	5248.00	15.01
90+97.53	0.50, LT.	24	5263.42	5255.00	7	5248.00	15.42
91+07.53	0.50, LT.	24	5264.15	5255.00	7	5248.00	16.15
91+17.53	0.50, LT.	24	5264.88	5255.00	7	5248.00	16.88
91+27.53	0.50, LT.	24	5265.62	5255.00	7	5248.00	17.62
91+42.53	0.50, LT.	24	5266.72	5255.00	7	5248.00	18.72
91+57.53	0.50, LT.	24	5267.87	5255.00	7	5248.00	19.87
91+76.50	0.50, LT.	24	5270.00	5255.00	6	5249.00	21.00

WALL TYPE A CAISSON DATA (1)

DH	CAISSON DIAMETER (IN.)	MAX. CAISSON SPACING (FT.)	MIN. PENETRATION INTO BEDRCOK (FT.)
DH ≤ 4	24	20.0	6
4 < DH ≤ 6	24	15.0	7
6 < DH ≤ 8	24	10.0	7
8 < DH ≤ 10	24	5.5	7
10 < DH ≤ 12.5	30	6.0	9
12.5 < DH ≤ 14	30	4.5	9
14 < DH ≤ 15.5	30	3.5	10

WALL TYPE B CAISSON DATA (1)

DH	CAISSON DIAMETER (IN.)	MAX. CAISSON SPACING (FT.)	MIN. PENETRATION INTO BEDRCOK (FT.)
DH ≤ 4	24	15.0	5
4 < DH ≤ 6	24	9.0	6
6 < DH ≤ 8	30	10.0	8
8 < DH ≤ 10	30	5.0	9

WALL TYPE C CAISSON DATA (1)

DH	CAISSON DIAMETER (IN.)	MAX. CAISSON SPACING (FT.)	MIN. PENETRATION INTO BEDRCOK (FT.)
4 < DH ≤ 6	24	10.0	7
6 < DH ≤ 8	24	5.5	7

KEY NOTES

(1) IF CONDITIONS ENCOUNTERED IN THE FIELD RESULT IN WALL HEIGHTS TALLER THAN DESIGN HEIGHTS DIMENSIONED ON THE WALL GENERAL LAYOUT SHEETS, CAISSONS SHALL BE ADJUSTED TO MEET THE REQUIREMENTS OF THE DESIGN HEIGHT THAT MATCHES THE ACTUAL WALL HEIGHT.

NOTES

1. FOR NOTES, SEE DWG. NO. W13.

TSIOUVARAS SIMMONS HOLDERNESS
CONSULTING ENGINEERS

12/7/2009 1:14:42 PM

Computer File Information		
Creation Date: 07–13–08	Initials: ARP	
Last Modification Date: 09–25–09	Initials: PMH	
Full Path:	p:\070205d – 30th st\cad\sheets\	
File Name:	070205–W14–CaissonData02.dgn	
CAD Ver. MicroStation V8 Orig. Scale: NONE	Units: ENGLISH	

Sheet Revisions

CITY OF BOULDER PUBLIC WORKS DEPARTMENT

Colorado Department of Transportation
DOT
1420 Second Street
Greeley, CO 80631
Phone: (970) 350–2126
FAX: (970) 350–2198
Region 4 PJG

As Constructed
No Revisions:
Revised:
Void:

30th STREET TRANSPORTATION PROJECTS
RETAINING WALLS
CAISSON SUMMARY (2 OF 2)

Designer: L. Thompson
Detailer: A. Pelster
Structure Numbers
Sheet Subset: WALLS
Subset Sheets: W14 of 27

Project No./Code
AQC M110–047
STU M110–053
AQC M110–055

Sheet Number 319

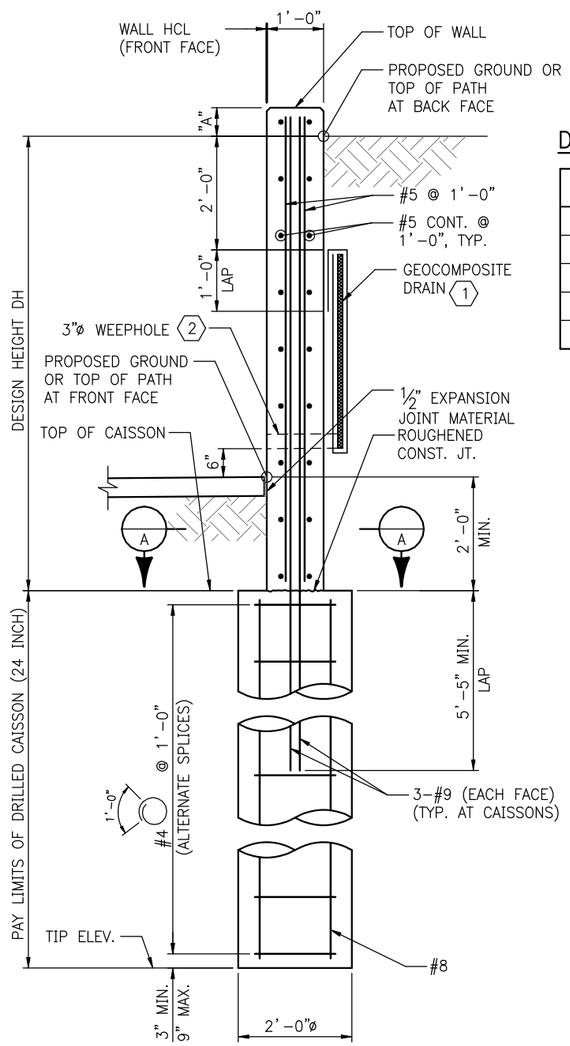

DESIGN HEIGHT ≤ 10'

DIMENSION "A"

WALL NO.	A
3	6"
4	6"
5	6"
7	6" TO 1'-6"
9	1'-6"

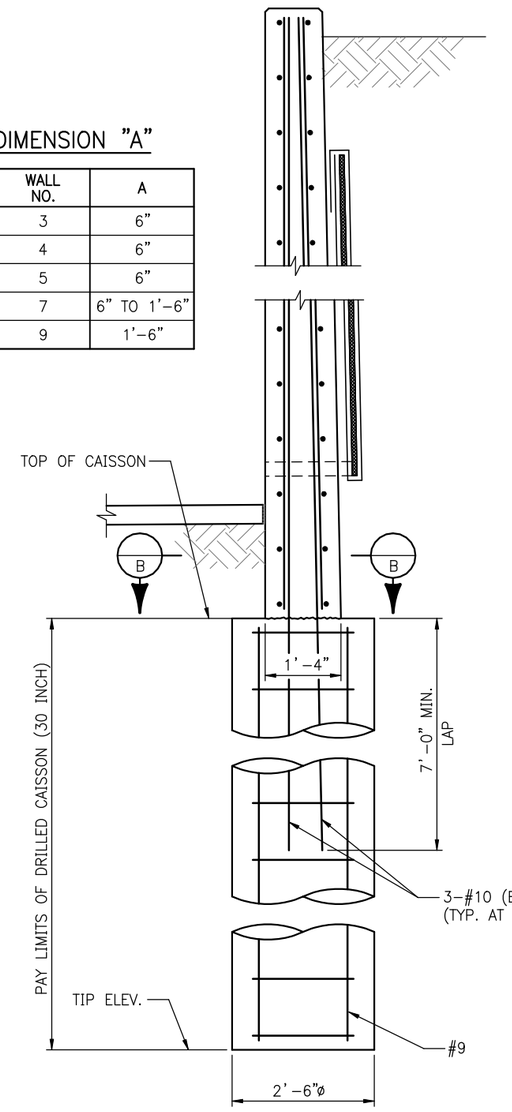

10' < DESIGN HEIGHT ≤ 15.5'

(SIMILAR TO "DESIGN HEIGHT ≤ 10'", EXCEPT AS NOTED)

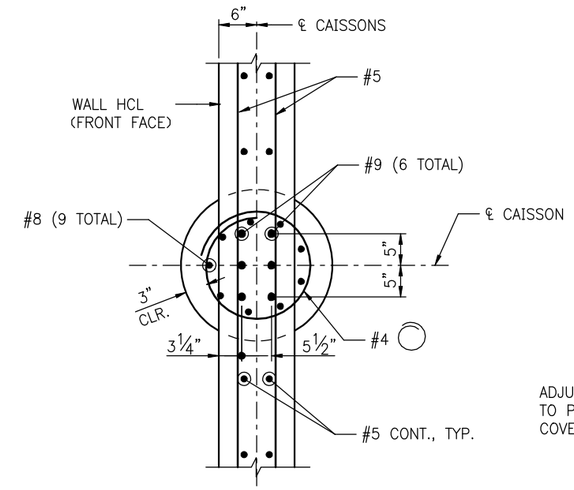

SECTION A
SCALE: ½"=1'

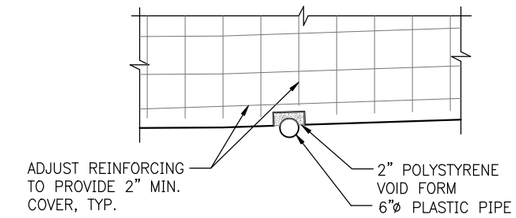

DETAIL W11 C
SCALE: ¼"=1'

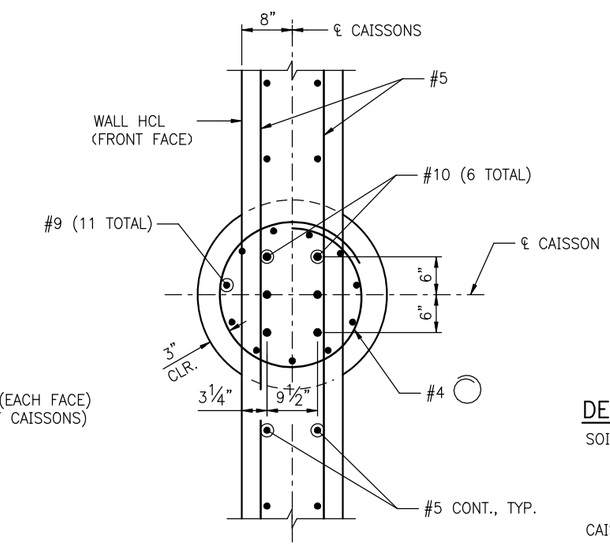

SECTION B
SCALE: ½"=1'

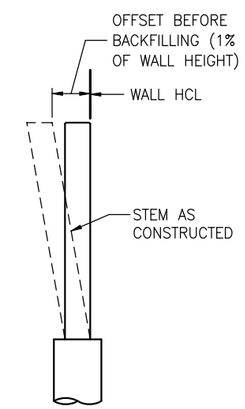

WALL OFFSET

KEY NOTES

1. GEOCOMPOSITE DRAIN SHALL CONSIST OF PLASTIC DRAINAGE CORE WITH GEOTEXTILE (DRAINAGE) WRAPPED ALL AROUND. LAPS IN GEOTEXTILE SHALL BE 1'-0" MIN. SECURE TO WALL PER MANUFACTURER'S RECOMMENDATIONS TO PREVENT MOVEMENT DURING BACKFILLING. BOTTOM OF DRAIN SHALL BE SLOPED TO DRAIN (1% MIN.) TOWARD WEEPHOLES. CONTRACTOR MAY END DRAIN WHEN HEIGHT OF DRAIN IS LESS THAN 1'-0". COST SHALL BE INCLUDED IN ITEM 601, CONCRETE CLASS D (WALL).

2. SPACE WEEPHOLES AT 10'-0" MAX. O.C. SLOPE TO DRAIN AT 2% MIN.

DESIGN DATA

SOIL PROPERTIES:
RETAINED EARTH (ACTIVE): K_a = 38 pcf (HORIZONTAL)
LIVE LOAD SURCHARGE = 2 FEET
BACKFILL (CLASS 1): γ = 135 pcf

CAISSON CONCRETE:
CLASS BZ CONCRETE: f'_c = 4,000 psi
REINFORCING STEEL: f_y = 60,000 psi

NOTES

1. WALL STEM SHALL BE CONCRETE CLASS D (WALL).
2. FOR CAISSON DATA, SEE DWG. NOS. W13 AND W14.
3. REINFORCING PROJECTING FROM CAISSONS SHALL BE INCLUDED IN THE COST OF ITEM 503, DRILLED CAISSON.

TSIOUVARAS SIMMONS HOLDERNESS
CONSULTING ENGINEERS

Computer File Information			Sheet Revisions				As Constructed	30th STREET TRANSPORTATION PROJECTS RETAINING WALLS WALL TYPE A DETAILS		Project No./Code
Creation Date: 06-18-08	Initials: ARP						No Revisions:	Designer: L. Thompson	Structure Numbers	AQC M110-047
Last Modification Date: 09-25-09	Initials: ARP						Revised:	Detailer: A. Pelster		STU M110-053
Full Path: p:\070205d - 30th st\cad\sheets\							Void:	Sheet Subset: WALLS	Subset Sheets: W15 of 27	AQC M110-055
File Name: 070205-W15-TypeADetails.dgn										Sheet Number 320
CAD Ver. MicroStation V8 Orig. Scale: 3/8"=1'-0" Units: ENGLISH										

CITY OF BOULDER PUBLIC WORKS DEPARTMENT

Colorado Department of Transportation
DOT
1420 Second Street
Greeley, CO 80631
Phone: (970) 350-2126
FAX: (970) 350-2198
Region 4 PJG

12/7/2009 1:14:45 PM

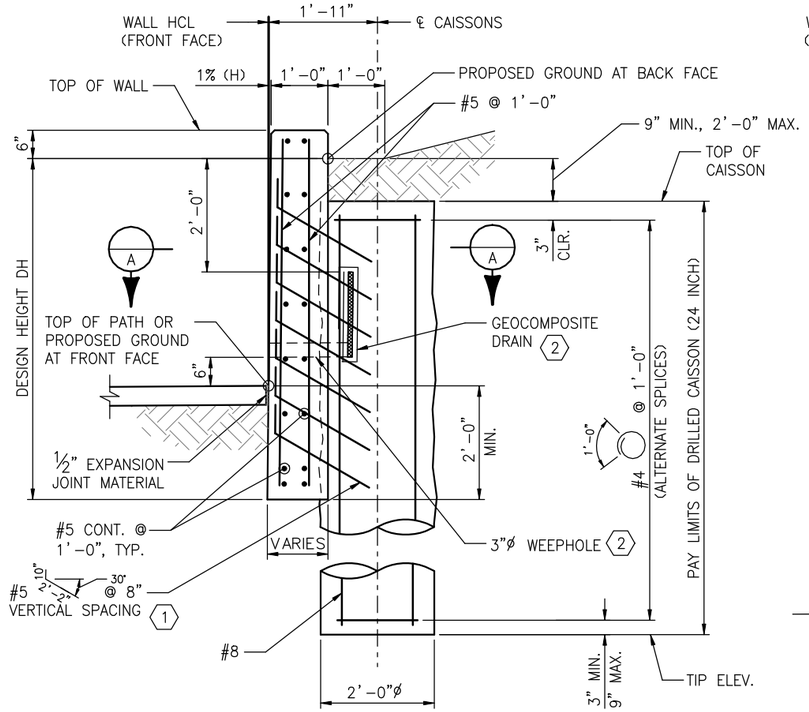

DESIGN HEIGHT ≤ 6'

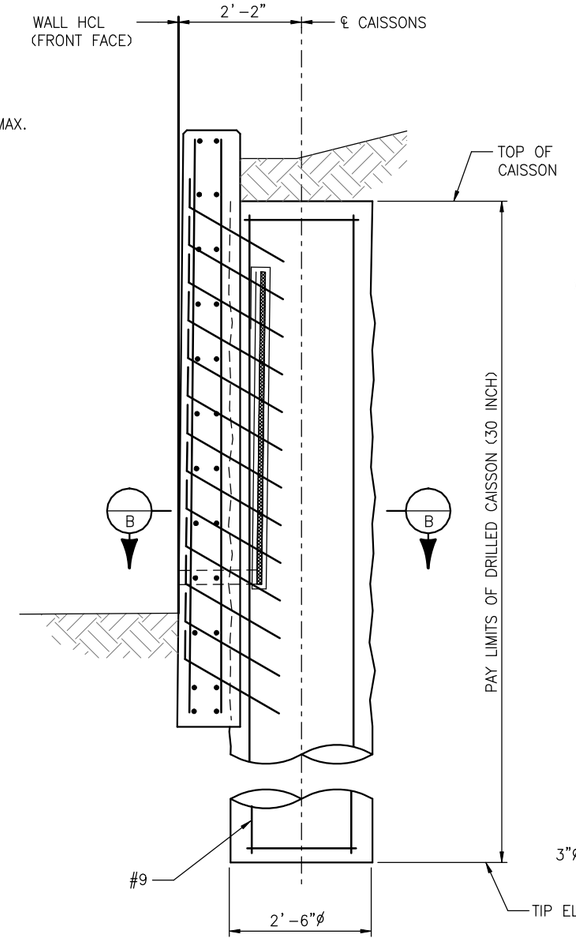

6' < DESIGN HEIGHT ≤ 10'

(SIMILAR TO "DESIGN HEIGHT ≤ 6'", EXCEPT AS NOTED)

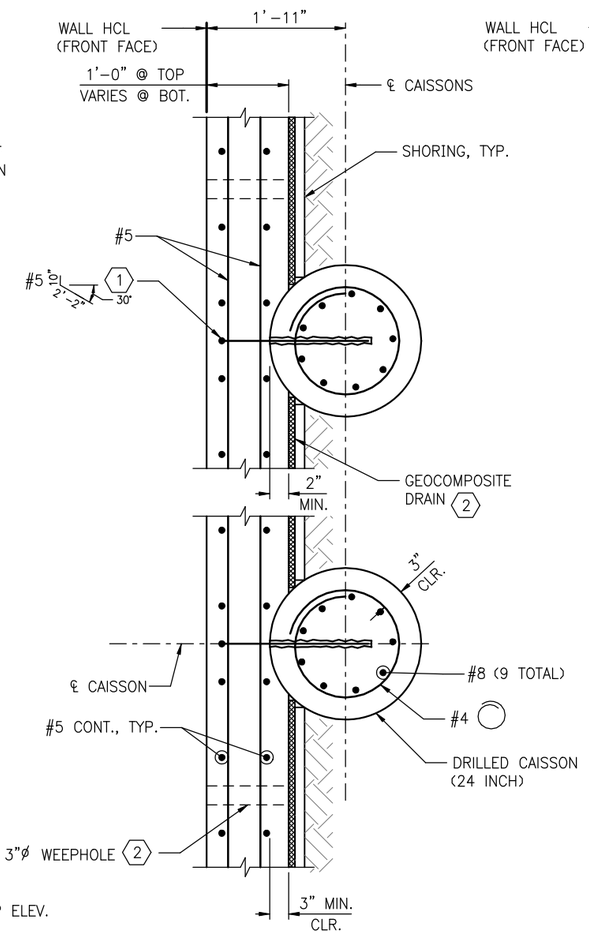

SECTION A
SCALE: 1/2"=1'

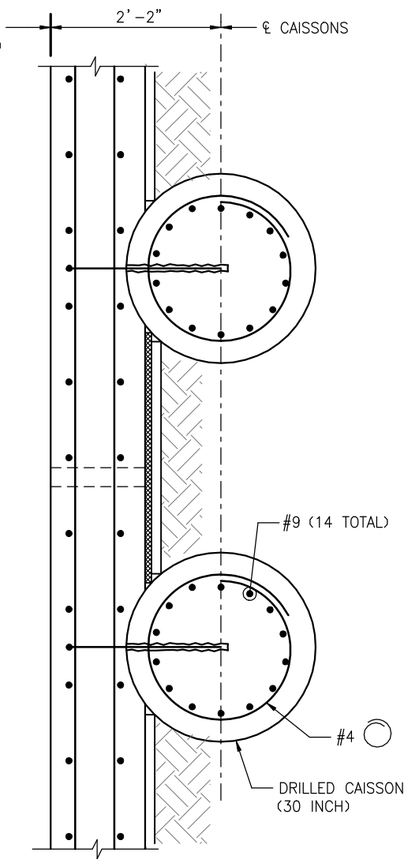

SECTION B
SCALE: 1/2"=1'

(SIMILAR TO "SECTION A", EXCEPT AS SHOWN)

NOTES

1. WALL FACING SHALL BE CONCRETE CLASS D (WALL).
2. FOR CAISSON DATA, SEE DWG. NOS. W13 AND W14.
3. LIMITS OF DISTURBANCE BEHIND WALL DUE TO EXCAVATION SHALL NOT EXCEED 2'-0" FROM ℄ CAISSONS.

SHORING NOTES

1. SHORING SHALL BE PROVIDED TO PREVENT MOVEMENT OR CAVING OF THE EARTH BETWEEN CAISSONS.
2. SHORING METHOD SHALL BE THE RESPONSIBILITY OF THE CONTRACTOR AND SHALL BE SUBMITTED TO THE ENGINEER FOR APPROVAL PRIOR TO CONSTRUCTION.
3. SHORING SHALL BE FREE-DRAINING.
4. ANY VOID SPACES BEHIND THE SHORING SHALL BE BACKFILLED WITH GRANULAR MATERIAL.
5. ALL WORK AND MATERIALS NECESSARY FOR SHORING WILL NOT BE MEASURED AND PAID FOR, BUT SHALL BE INCLUDED IN ITEM 206, STRUCTURE EXCAVATION.

KEY NOTES

1. FIELD DRILL 1" HOLES INTO CAISSON TO RECEIVE #5 DOWEL. GROUT DOWEL IN PLACE WITH ENGINEER APPROVED EPOXY GROUT. PROVIDE 1'-6" MINIMUM EMBEDMENT INTO CAISSON AND 8" PROJECTION INTO WALL FACING. ROTATE HOOKS 45° FROM PLUMB TO PROVIDE CLEARANCE BETWEEN ADJACENT DOWELS.

2. PROVIDE GEOCOMPOSITE DRAIN AND WEEPHOLE BETWEEN CAISSONS, AT 10 FEET MAX. O.C. GEOCOMPOSITE DRAIN SHALL CONSIST OF PLASTIC DRAINAGE CORE WITH GEOTEXTILE (DRAINAGE) WRAPPED ALL AROUND. LAPS IN GEOTEXTILE SHALL BE 1'-0" MIN. SECURE PER MANUFACTURER'S RECOMMENDATIONS TO PREVENT MOVEMENT DURING CONCRETE PLACEMENT. BOTTOM OF DRAIN SHALL BE SLOPED TO DRAIN (1% MIN.) TOWARD WEEPHOLES. CONTRACTOR MAY END DRAIN WHEN HEIGHT OF DRAIN IS LESS THAN 1'-0". SLOPE WEEPHOLE TO DRAIN AT 2% MIN. COST SHALL BE INCLUDED IN ITEM 601, CONCRETE CLASS D (WALL).

DESIGN DATA

SOIL PROPERTIES:
RETAINED EARTH (ACTIVE): K_a = 56 pcf (HORIZONTAL)
LIVE LOAD SURCHARGE = 2 FEET

CAISSON CONCRETE:
CLASS BZ CONCRETE: f'_c = 4,000 psi
REINFORCING STEEL: f_y = 60,000 psi

TSIOUVARAS SIMMONS HOLDERNESS
CONSULTING ENGINEERS

Computer File Information		
Creation Date: 06-18-08	Initials: ARP	
Last Modification Date: 09-28-09	Initials: PMH	
Full Path: p:\070205d - 30th st\cad\sheets\		
File Name: 070205-W16-TypeBDetails.dgn		
CAD Ver. MicroStation V8 Orig. Scale: 3/8"=1'-0" Units: ENGLISH		

Sheet Revisions

CITY OF BOULDER PUBLIC WORKS DEPARTMENT

Colorado Department of Transportation
DOT 1420 Second Street Greeley, CO 80631 Phone: (970) 350-2126 FAX: (970) 350-2198
Region 4 PJG

As Constructed
No Revisions:
Revised:
Void:

30th STREET TRANSPORTATION PROJECTS
RETAINING WALLS
WALL TYPE B DETAILS

Designer: C. Krajnik
Detailer: A. Pelster
Structure Numbers
Sheet Subset: WALLS
Subset Sheets: W16 of 27

Project No./Code
AQC M110-047
STU M110-053
AQC M110-055

Sheet Number 321

12/7/2009 1:14:48 PM

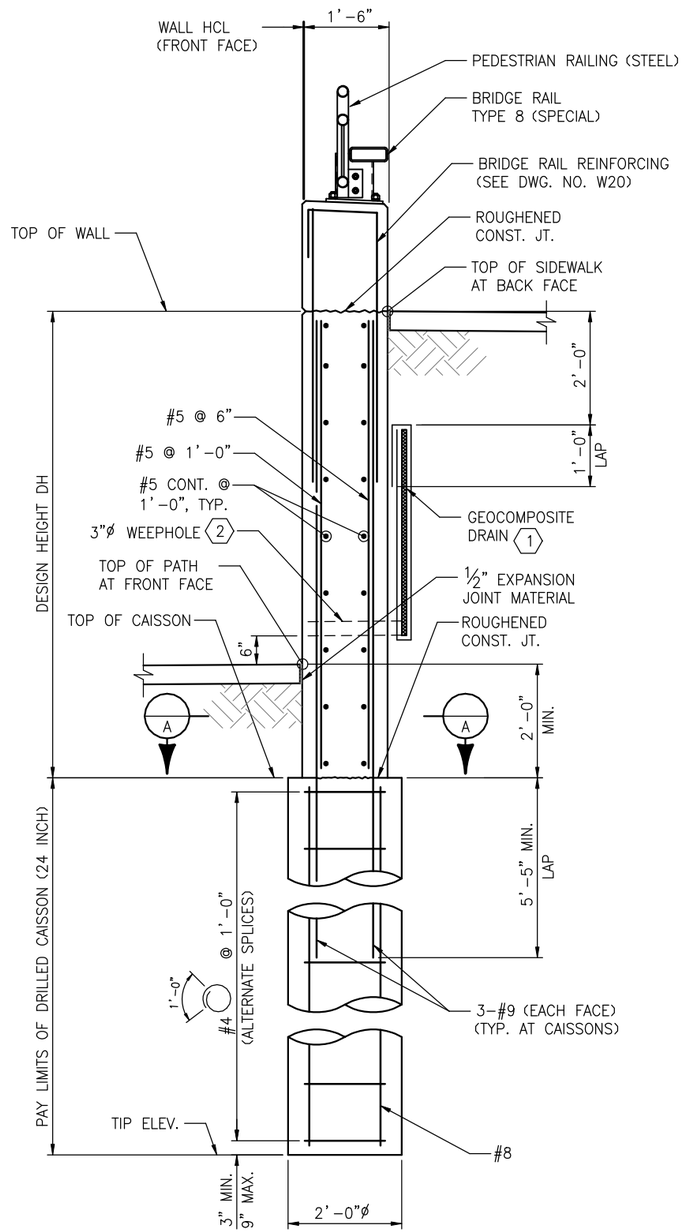

DESIGN HEIGHT ≤ 10'

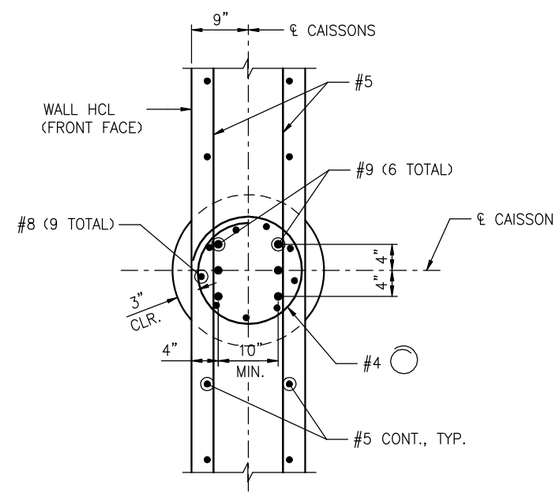

SECTION A
SCALE: 1/2"=1'

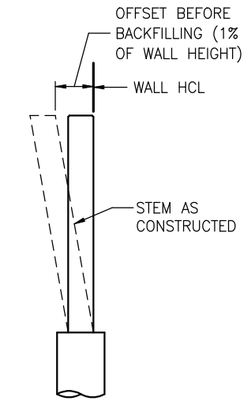

WALL OFFSET

DESIGN DATA

SOIL PROPERTIES:
RETAINED EARTH (ACTIVE): K_a = 38 pcf (HORIZONTAL)
LIVE LOAD SURCHARGE = 2 FEET
BACKFILL (CLASS 1): γ = 135 pcf

CAISSON CONCRETE:
CLASS BZ CONCRETE: f'_c = 4,000 psi
REINFORCING STEEL: f_y = 60,000 psi

KEY NOTES

1. GEOCOMPOSITE DRAIN SHALL CONSIST OF PLASTIC DRAINAGE CORE WITH GEOCOTEXTILE (DRAINAGE) WRAPPED ALL AROUND. LAPS IN GEOTEXTILE SHALL BE 1'-0" MIN. SECURE TO WALL PER MANUFACTURER'S RECOMMENDATIONS TO PREVENT MOVEMENT DURING BACKFILLING. BOTTOM OF DRAIN SHALL BE SLOPED TO DRAIN (1% MIN.) TOWARD WEEPHOLES. CONTRACTOR MAY END DRAIN WHEN HEIGHT OF DRAIN IS LESS THAN 1'-0". COST SHALL BE INCLUDED IN ITEM 601, CONCRETE CLASS D (WALL).

2. SPACE WEEPHOLES AT 10'-0" MAX. O.C. SLOPE TO DRAIN AT 2% MIN.

NOTES

1. WALL STEM SHALL BE CONCRETE CLASS D (WALL).
2. FOR CAISSON DATA, SEE DWG. NOS. W13 AND W14.
3. REINFORCING PROJECTING FROM CAISSONS SHALL BE INCLUDED IN THE COST OF ITEM 503, DRILLED CAISSON.

TSIOUVARAS SIMMONS HOLDERNESS
CONSULTING ENGINEERS

12/7/2009 1:14:51 PM

Computer File Information		
Creation Date: 06-21-08	Initials: ARP	
Last Modification Date: 04-03-09	Initials: ARP	
Full Path: p:\070205d - 30th st\cad\sheets\		
File Name: 070205-W17-TypeCDetails.dgn		
CAD Ver. MicroStation V8 Orig. Scale: 3/8"=1'-0" Units: ENGLISH		

Sheet Revisions

CITY OF BOULDER PUBLIC WORKS DEPARTMENT

Colorado Department of Transportation
DOT
1420 Second Street
Greeley, CO 80631
Phone: (970) 350-2126
FAX: (970) 350-2198
Region 4 PJG

As Constructed
No Revisions:
Revised:
Void:

30th STREET TRANSPORTATION PROJECTS
RETAINING WALLS
WALL TYPE C DETAILS

Designer: J. Simmons
Detailer: A. Pelster
Structure Numbers
Sheet Subset: WALLS
Subset Sheets: W17 of 27

Project No./Code
AQC M110-047
STU M110-053
AQC M110-055

Sheet Number 322

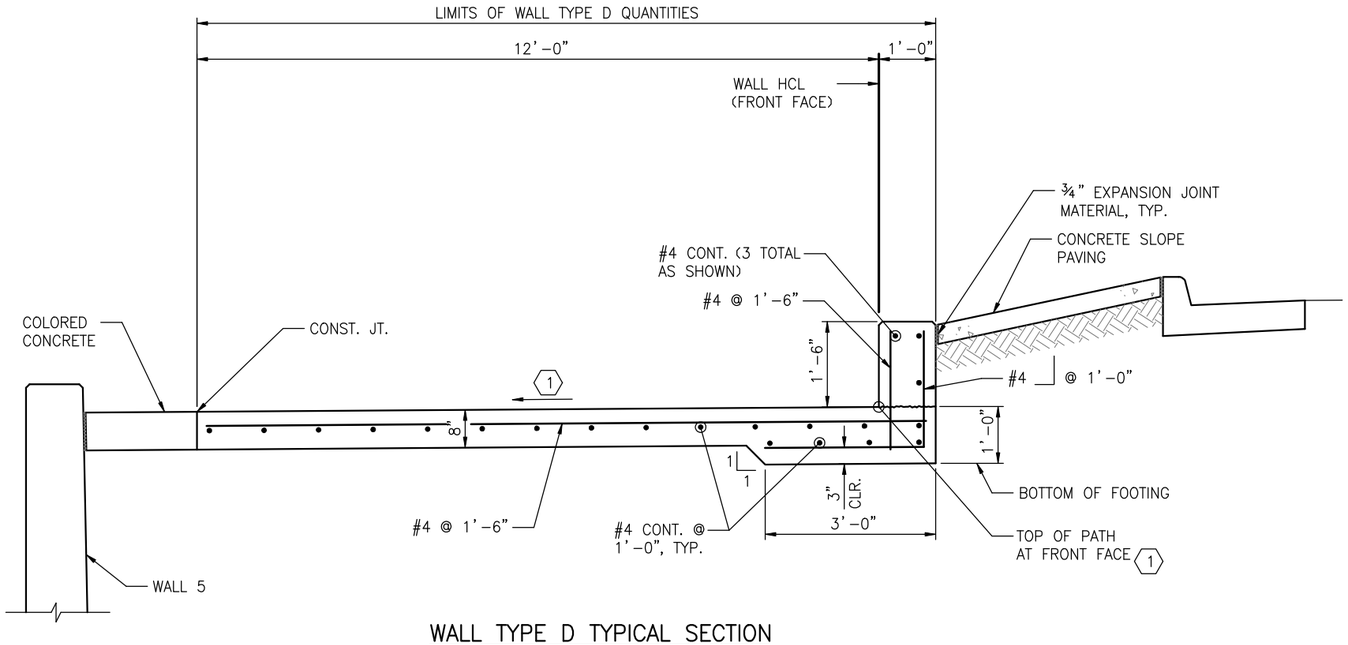

WALL TYPE D TYPICAL SECTION

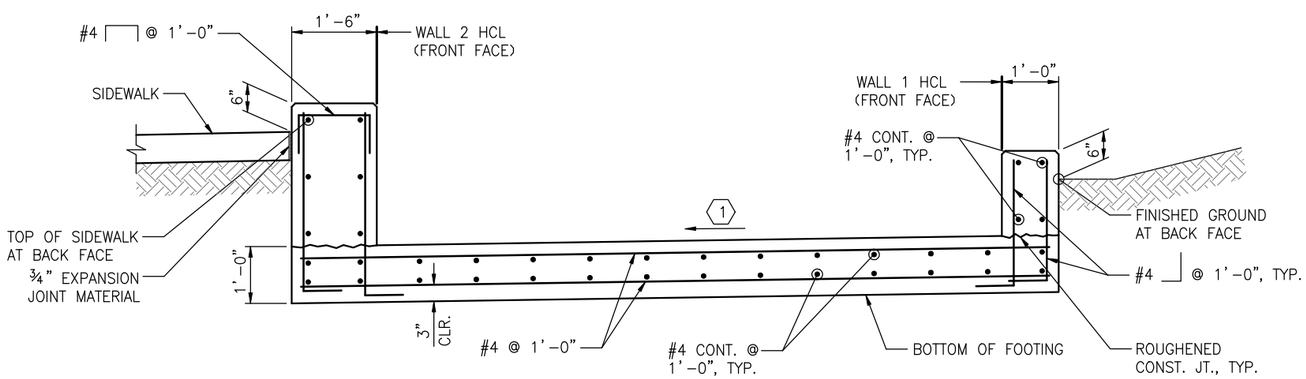

WALL TYPE F TYPICAL SECTION

DESIGN DATA

EQUIVALENT FLUID PRESSURE (ACTIVE) = 38 PCF
EQUIVALENT FLUID PRESSURE (PASSIVE) = 480 PCF
COEFFICIENT OF FRICTION = 0.32
REQUIRED BEARING CAPACITY = 3000 PSF

KEY NOTES

1. FOR PATH PROFILE GRADE AND CROSS SLOPE INFORMATION, SEE PATH SUBSET.

NOTES

1. CONCRETE SHALL BE CONCRETE CLASS D (WALL).
2. PATH SURFACE SHALL RECEIVE A TRANSVERSE BROOM FINISH IN ACCORDANCE WITH SECTION 608 OF THE SPECIFICATIONS.
3. ALL WALL TYPE F QUANTITIES ARE INCLUDED UNDER THE WALL 1 QUANTITIES ON THE SUMMARY OF QUANTITIES SHEET.

TSIOUVARAS SIMMONS HOLDERNESS
CONSULTING ENGINEERS

12/7/2009 1:14:53 PM

Computer File Information			
Creation Date:	07-09-08	Initials:	ARP
Last Modification Date:	11-24-09	Initials:	SRF
Full Path:	p:\070205d - 30th st\cad\sheets\		
File Name:	070205-W18-TypeDDetails.dgn		
CAD Ver. MicroStation V8	Orig. Scale: 3/8"=1'-0"	Units:	ENGLISH

Sheet Revisions

CITY OF BOULDER PUBLIC WORKS DEPARTMENT

Colorado Department of Transportation
CDOT
1420 Second Street
Greeley, CO 80631
Phone: (970) 350-2126
FAX: (970) 350-2198
Region 4 PJG

As Constructed
No Revisions:
Revised:
Void:

30th STREET TRANSPORTATION PROJECTS
RETAINING WALLS
WALL TYPES D & F DETAILS

Designer: J. Simmons
Detailer: A. Pelster
Structure Numbers
Sheet Subset: WALLS
Subset Sheets: W18 of 27

Project No./Code
AQC M110-047
STU M110-053
AQC M110-055

Sheet Number 323

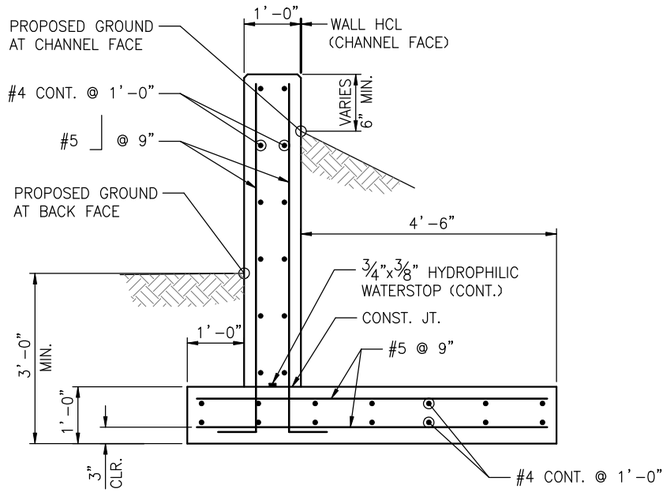

TYPICAL SECTION

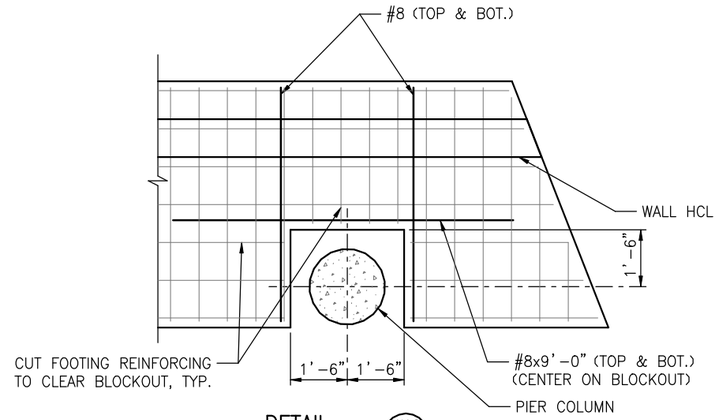

DETAIL W10 A
SCALE: 1/4"=1'

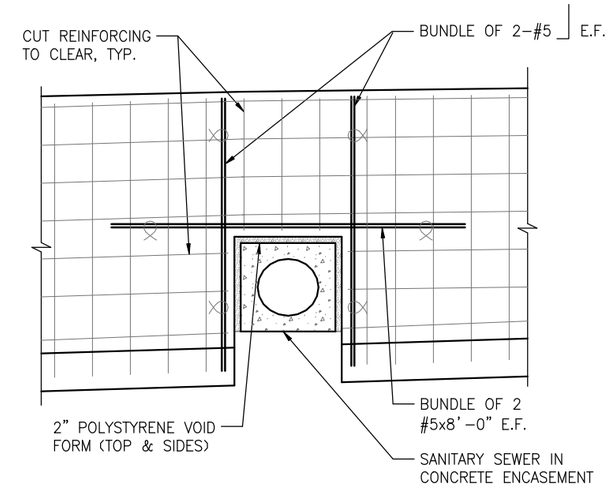

DETAIL W10 B
SCALE: 1/4"=1'

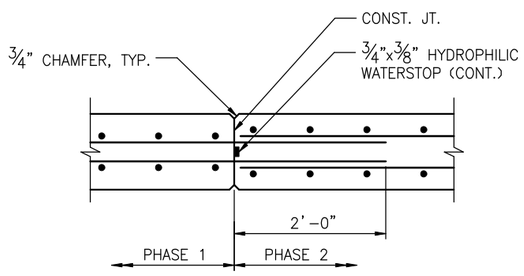

CONSTRUCTION JOINT
SCALE: 1/2"=1'-0"

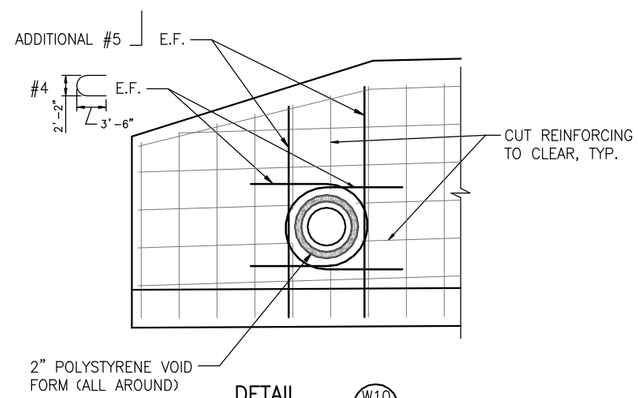

DETAIL W10 C
SCALE: 1/4"=1'

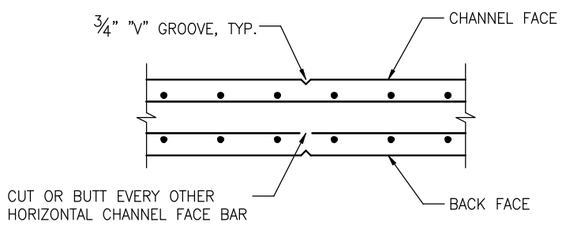

WEAKENED PLANE
SCALE: 1/2"=1'-0"

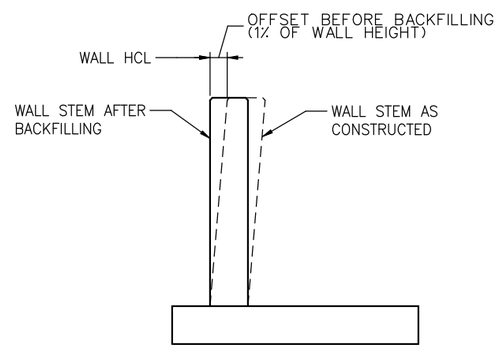

WALL OFFSET
N.T.S.

DESIGN DATA

EQUIVALENT FLUID PRESSURE (ACTIVE) = 38 PCF
EQUIVALENT FLUID PRESSURE (PASSIVE) = 475 PCF
COEFFICIENT OF FRICTION = 0.32
REQUIRED BEARING CAPACITY = 3000 PSF

NOTES

1. WALL SHALL BE CONCRETE CLASS D (WALL).
2. COST OF HYDROPHILIC WATERSTOP SHALL BE INCLUDED IN ITEM 601, CONCRETE CLASS D (WALL).

TSIOUVARAS SIMMONS HOLDERNESS
CONSULTING ENGINEERS

12/7/2009 1:14:57 PM

Computer File Information			
Creation Date:	07-09-08	Initials:	ARP
Last Modification Date:	09-29-09	Initials:	PMH
Full Path:	p:\070205d - 30th st\cad\sheets\		
File Name:	070205-W19-TypeEDetails.dgn		
CAD Ver. MicroStation V8	Orig. Scale: 3/8"=1'-0"	Units:	ENGLISH

Sheet Revisions

CITY OF BOULDER PUBLIC WORKS DEPARTMENT

Colorado Department of Transportation
1420 Second Street
Greeley, CO 80631
Phone: (970) 350-2126
FAX: (970) 350-2198
Region 4 PJG

As Constructed
No Revisions:
Revised:
Void:

30th STREET TRANSPORTATION PROJECTS
RETAINING WALLS
WALL TYPE E DETAILS

Designer:	J. Simmons	Structure Numbers	
Detailer:	A. Pelster		
Sheet Subset:	WALLS	Subset Sheets:	W19 of 27

Project No./Code
AQC M110-047
STU M110-053
AQC M110-055

Sheet Number 324

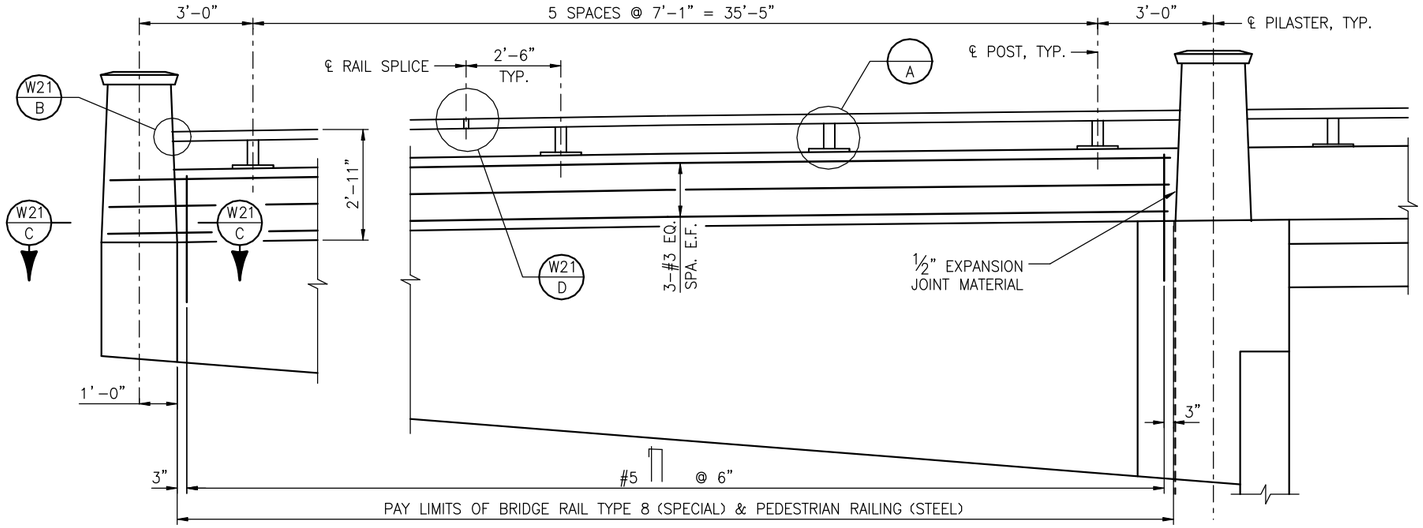

PARTIAL ELEVATION

(PEDESTRIAN RAILING NOT SHOWN)

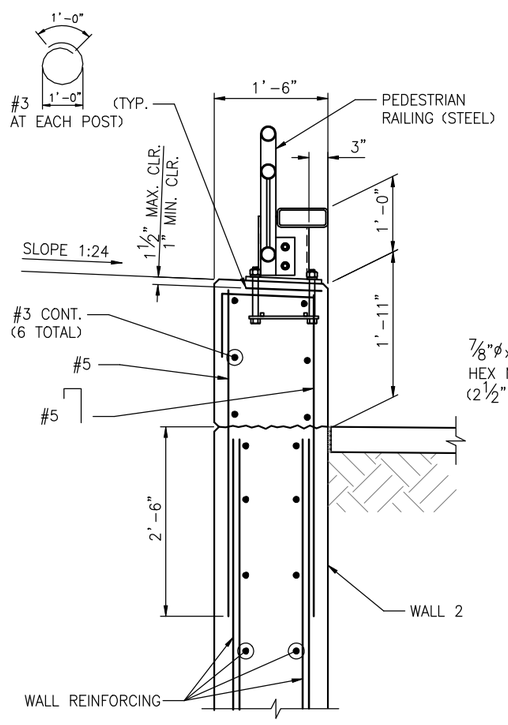

TYPICAL SECTION

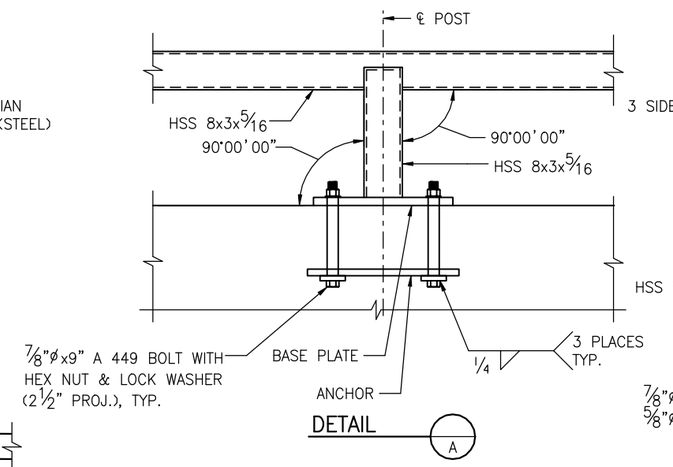

DETAIL

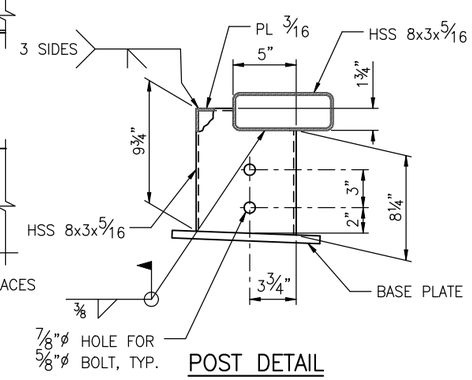

POST DETAIL

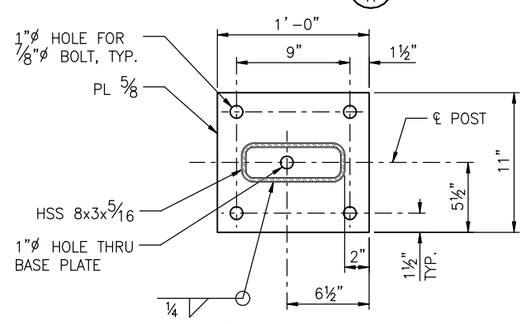

BASE PLATE DETAIL

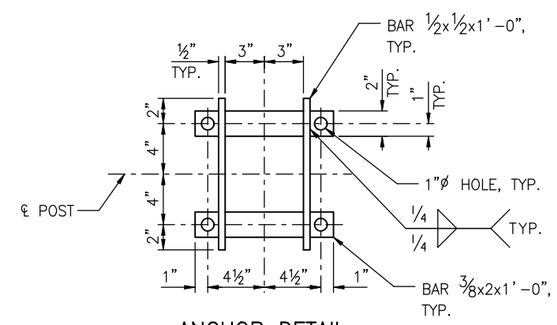

ANCHOR DETAIL

KEY NOTES

(1) CONTRACTOR SHALL VERIFY DIMENSIONS, PRIOR TO FABRICATION.

NOTES

1. ALL TUBES SHALL BE FABRICATED FROM ASTM A 500 GRADE B.
2. BASE PLATES SHALL BE FABRICATED FROM ASTM A 36 STEEL.
3. THE ABOVE MATERIAL SHALL BE PAINTED AFTER FABRICATION IN ACCORDANCE WITH SECTION 509 OF THE STANDARD SPECIFICATIONS. THE COLOR SHALL BE BLACK, EQUIVALENT TO FEDERAL STANDARD 595B COLOR NO. 17038. ALL ANCHOR BOLTS, NUTS, AND WASHERS SHALL BE GALVANIZED IN ACCORDANCE WITH SECTION 509. CONCRETE, REINFORCING STEEL, AND STRUCTURAL STEEL ELEMENTS SHALL CONFORM TO THE REQUIREMENTS OF SECTIONS 601, 602, AND 509, RESPECTIVELY.
4. POST ANCHOR, ENCASED IN CONCRETE, SHALL BE ASTM A 36 OR AASHTO M 169 STEEL AND NEED NOT BE GALVANIZED.
5. THE TUBES SHALL BE SHOP BENT OR FABRICATED TO FIT HORIZONTAL CURVE WHEN RADIUS IS LESS THAN 2,400 FEET.
6. TUBES SHALL BE CONTINUOUS OVER NOT LESS THAN THREE POSTS. NO WELDED BUTT SPLICES WILL BE ALLOWED IN THE TUBE SECTIONS.
7. THE CENTERLINE OF THE POSTS SHALL BE A 2'-6" MINIMUM AND 7'-4" MAXIMUM FROM THE CENTERLINE OF THE TUBE EXPANSION SPLICE, MEASURED ALONG THE CENTERLINE OF POSTS.
8. ALL BOLTS THAT HAVE LOCK WASHERS SHALL BE TIGHTENED TO SNUG ONLY. POSTS SHALL BE PERPENDICULAR TO THE LONGITUDINAL ROADWAY GRADE.
9. PAYMENT WILL BE MADE UNDER ITEM 606, BRIDGE RAIL TYPE 8 FOR ALL POST ANCHORS, BASE PLATES, ANCHOR BOLTS, NUTS, WASHERS, TUBES TUBE EXPANSION DEVICES, END PLATES, CURB CONCRETE (CLASS D), CURB REINFORCING STEEL.
10. WELDING SHALL BE IN ACCORDANCE WITH ANSI/ AASHTO/ AWS D1.1.
11. PRIOR TO FABRICATION OF THIS ITEM, THREE SETS OF WORKING DRAWINGS WHICH COMPLY WITH THE REQUIREMENTS OF SECTION 105, SHALL BE SUBMITTED TO THE DEPARTMENT FOR INFORMATION ONLY. ONE SET SHALL BE SENT TO THE COLORADO DEPARTMENT OF TRANSPORTATION, STAFF MATERIALS INSPECTION UNIT, 4340 E. LOUISIANA AVENUE, DENVER, COLORADO 80222. TWO SETS SHALL BE SENT TO THE ENGINEER.
12. STRUCTURAL STEEL:

AASHTO M-183 (ASTM A-36)	f_y = 36,000 psi
COLD FORMED ASTM A-500 GRADE B	f_y = 46,000 psi
AASHTO M 223 (ASTM A-572) GRADE 50	f_y = 50,000 psi

13. FOR ADDITIONAL DETAILS SEE DWG. NO. W21.

TSIOUVARAS SIMMONS HOLDERNESS
CONSULTING ENGINEERS

12/7/2009 1:15:08 PM

Computer File Information	
Creation Date:	06-21-08 Initials: ARP
Last Modification Date:	09-24-09 Initials: ARP
Full Path:	p:\070205d - 30th st\cad\sheets\
File Name:	070205-W20-BridgeRailType8.dgn
CAD Ver. MicroStation V8 Orig. Scale: 1/4" = 1'	Units: ENGLISH

Sheet Revisions

CITY OF BOULDER PUBLIC WORKS DEPARTMENT

Colorado Department of Transportation
DOT
1420 Second Street
Greeley, CO 80631
Phone: (970) 350-2126
FAX: (970) 350-2198
Region 4 PJG

As Constructed
No Revisions:
Revised:
Void:

30th STREET TRANSPORTATION PROJECTS
RETAINING WALLS
BRIDGE RAIL TYPE 8 (SPECIAL)

Designer: J. Simmons
Detailer: A. Pelster
Structure Numbers
Sheet Subset: WALLS
Subset Sheets: W20 of 27

Project No./Code
AQC M110-047
STU M110-053
AQC M110-055

Sheet Number 325

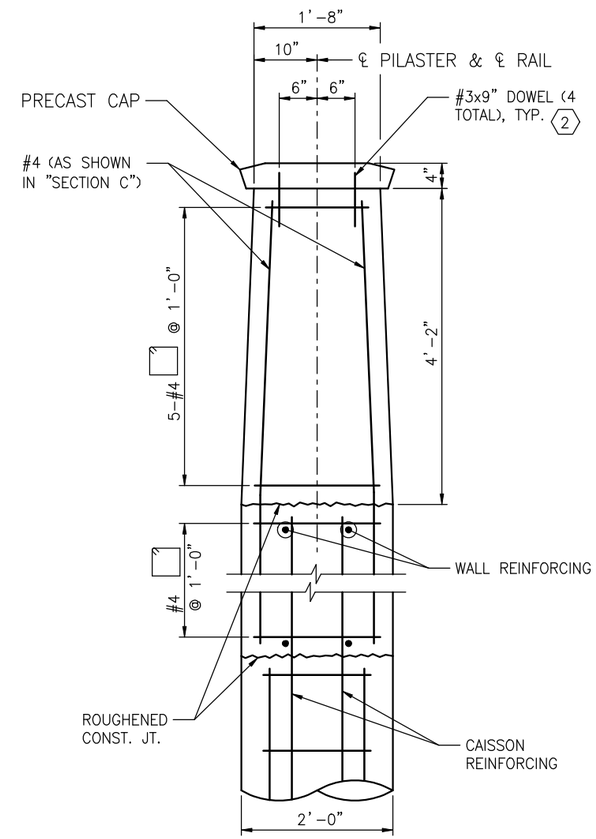

SECTION AT PILASTER

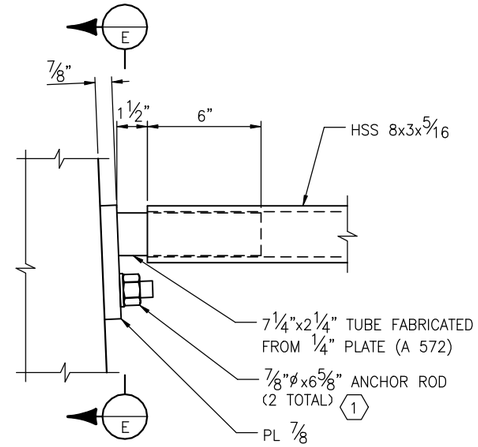

DETAIL W21 B
SCALE: 1 1/2"=1'

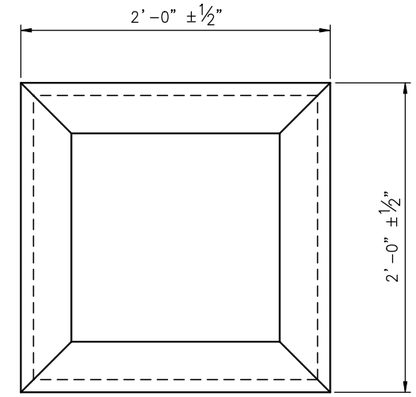

PLAN – PRECAST CAP
SCALE: 1"=1'-0"

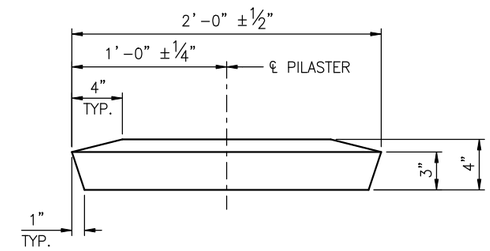

ELEVATION – PRECAST CAP
SCALE: 1"=1'-0"

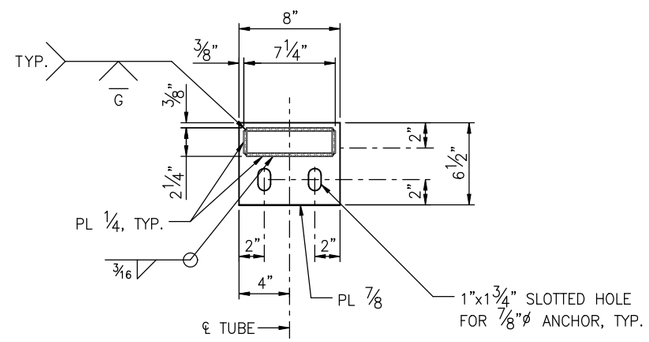

SECTION E
SCALE: 1 1/2"=1'

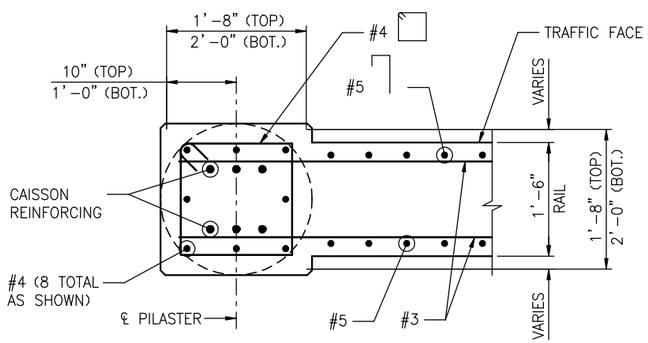

SECTION W20 C

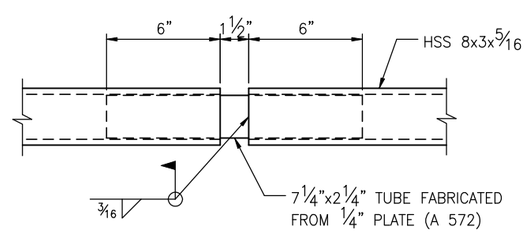

DETAIL W20 D
SCALE: 1 1/2"=1'

KEY NOTES

1. ANCHOR ROD SHALL BE HILTI HAS ANCHOR ROD ASSEMBLY WITH NUT AND WASHER, OR APPROVED EQUAL. FIELD DRILL HOLES AND INSTALL ANCHOR WITH HILTI HVU ADHESIVE, OR APPROVED EQUAL.
2. PROVIDE 3" PROJECTION FROM TOP OF PILASTER. FIELD DRILL 1"ø HOLES TO RECEIVE DOWELS. SET WITH ENGINEER APPROVED EPOXY. CONTRACTOR MAY PROVIDE ALTERNATIVE CONNECTION DETAIL FOR ENGINEER APPROVAL.

NOTES

1. PILASTER SHALL BE CONCRETE CLASS D (WALL).
2. COST OF MATERIALS AND WORKMANSHIP NECESSARY FOR FABRICATION AND INSTALLATION OF THE PRECAST CAP SHALL BE INCLUDED IN ITEM 601, PRECAST CONCRETE CAP.
3. PRECAST CAP DIMENSIONS SHOWN ARE NOMINAL. ACTUAL OVERALL CAP DIMENSIONS SHALL NOT VARY MORE THAN 1/2" FROM DIMENSIONS SHOWN.
4. CAP DESIGNS WITH ALTERNATIVE, BUT SIMILAR, PROFILES MAY BE SUBMITTED FOR ENGINEER APPROVAL.
5. MORTAR JOINT SHALL BE TOOLED SMOOTH AND CONCAVE.

TSIOUVARAS SIMMONS HOLDERNESS
CONSULTING ENGINEERS

12/7/2009 1:15:20 PM

Computer File Information	
Creation Date:	06/21-08 Initials: ARP
Last Modification Date:	08-01-08 Initials: ARP
Full Path:	p:\070205d - 30th st\cad\sheets\
File Name:	070205-W21-PilasterDetails.dgn
CAD Ver. MicroStation V8 Orig. Scale: 1/2" = 1'	Units: ENGLISH

Sheet Revisions

CITY OF BOULDER PUBLIC WORKS DEPARTMENT

Colorado Department of Transportation
DOT
1420 Second Street
Greeley, CO 80631
Phone: (970) 350-2126
FAX: (970) 350-2198
Region 4 PJG

As Constructed
No Revisions:
Revised:
Void:

30th STREET TRANSPORTATION PROJECTS
RETAINING WALLS
PILASTER AND BRIDGE RAIL DETAILS

Designer: M. Gilbert
Detailer: A. Pelster
Structure Numbers
Sheet Subset: WALLS
Subset Sheets: W21 of 27

Project No./Code
AQC M110-047
STU M110-053
AQC M110-055

Sheet Number 326

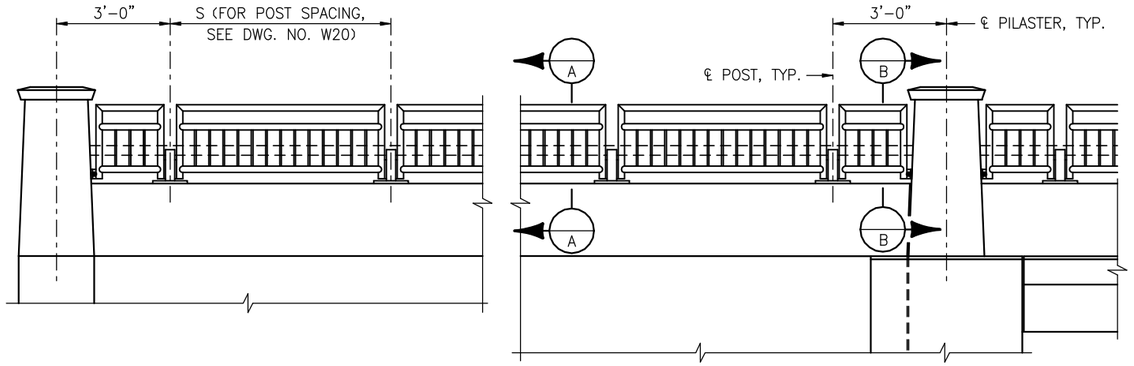

PARTIAL ELEVATION

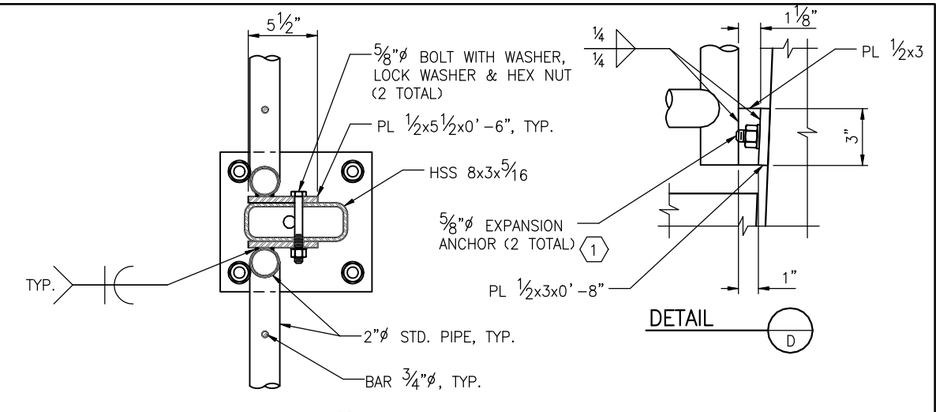

SECTION C

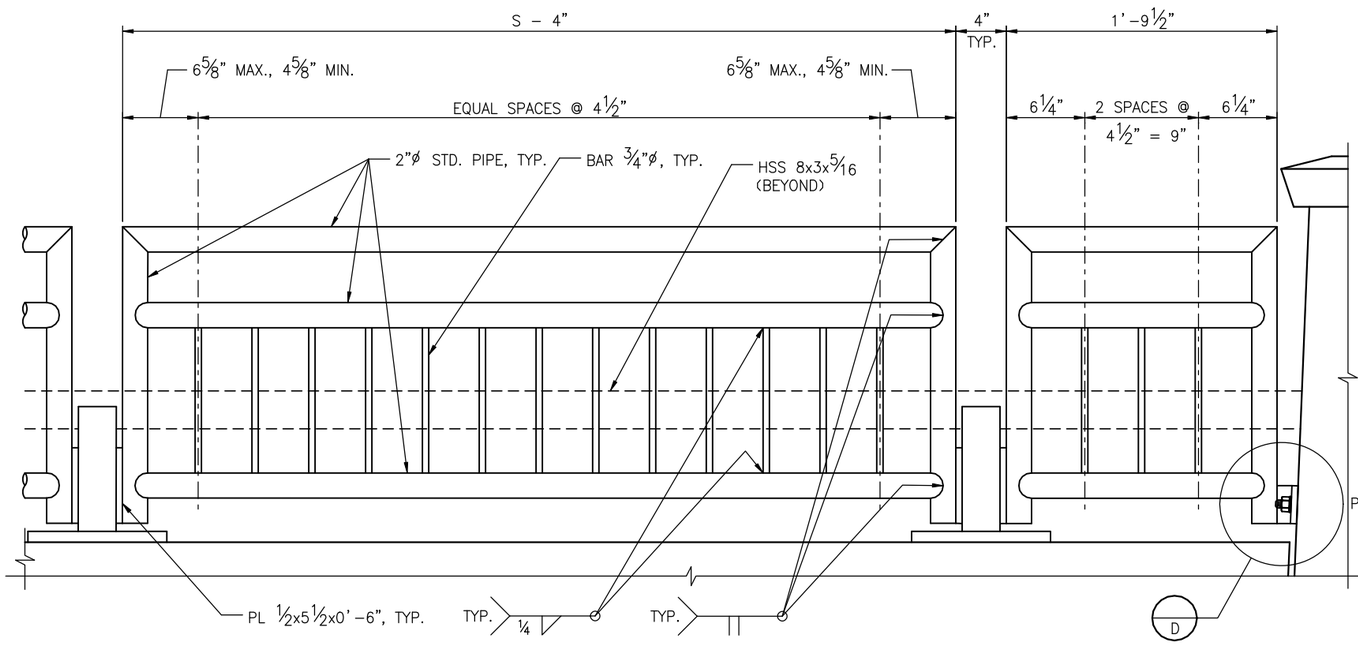

TYPICAL INTERIOR PANEL

TYPICAL END PANEL

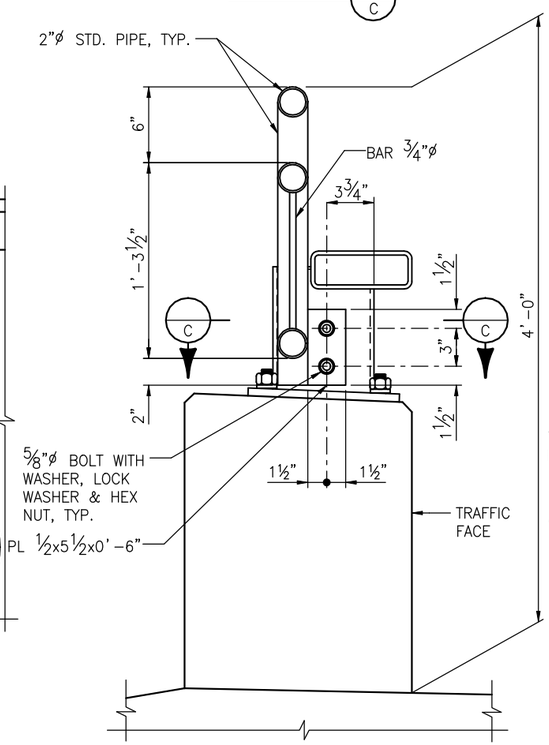

SECTION A

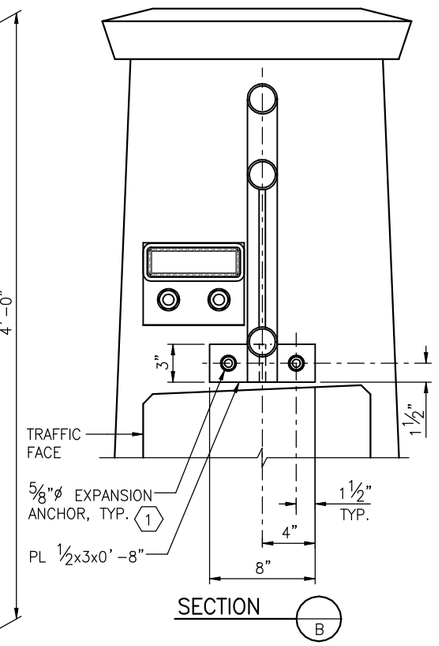

SECTION B

NOTES

1. STEEL SHALL BE SHOP PAINTED IN ACCORDANCE WITH SECTION 509 OF THE STANDARD SPECIFICATIONS. THE COLOR SHALL BE BLACK, EQUIVALENT TO FEDERAL STANDARD 595B COLOR NO. 17038.
2. STEEL PLATES SHALL BE ASTM A 36.
3. PANELS SHALL BE FABRICATED AND INSTALLED SUCH THAT POSTS ARE PLUMB AND HORIZONTAL MEMBERS FOLLOW THE GRADE OF THE TOP OF WALL.

KEY NOTES

1. EXPANSION ANCHORS AND EMBEDMENT SHALL BE APPROVED BY THE ENGINEER PRIOR TO CONSTRUCTION. EACH ANCHOR SHALL HAVE A MINIMUM ALLOWABLE TENSION CAPACITY OF 3000 LB.

PRELIMINARY
SUBJECT TO CHANGE

TSIOUVARAS SIMMONS HOLDERNESS
CONSULTING ENGINEERS

Computer File Information	
Creation Date:	06-21-08 Initials: ARP
Last Modification Date:	08-01-08 Initials: ARP
Full Path:	p:\070205d - 30th st\cad\sheets\
File Name:	070205-W22-PedestrianRailing.dgn
CAD Ver. MicroStation V8 Orig. Scale: NONE	Units: ENGLISH

Sheet Revisions

CITY OF BOULDER PUBLIC WORKS DEPARTMENT

Colorado Department of Transportation
DOT
1420 Second Street
Greeley, CO 80631
Phone: (970) 350-2126
FAX: (970) 350-2198
Region 4 PJG

As Constructed
No Revisions:
Revised:
Void:

30th STREET TRANSPORTATION PROJECTS
RETAINING WALLS
BARRIER MOUNTED PEDESTRIAN RAILING

Designer: J. Simmons
Detailer: A. Pelster
Structure Numbers
Sheet Subset: WALLS
Subset Sheets: W22 of 27

Project No./Code
AQC M110-047
STU M110-053
AQC M110-055

Sheet Number 327

12/7/2009 1:15:32 PM

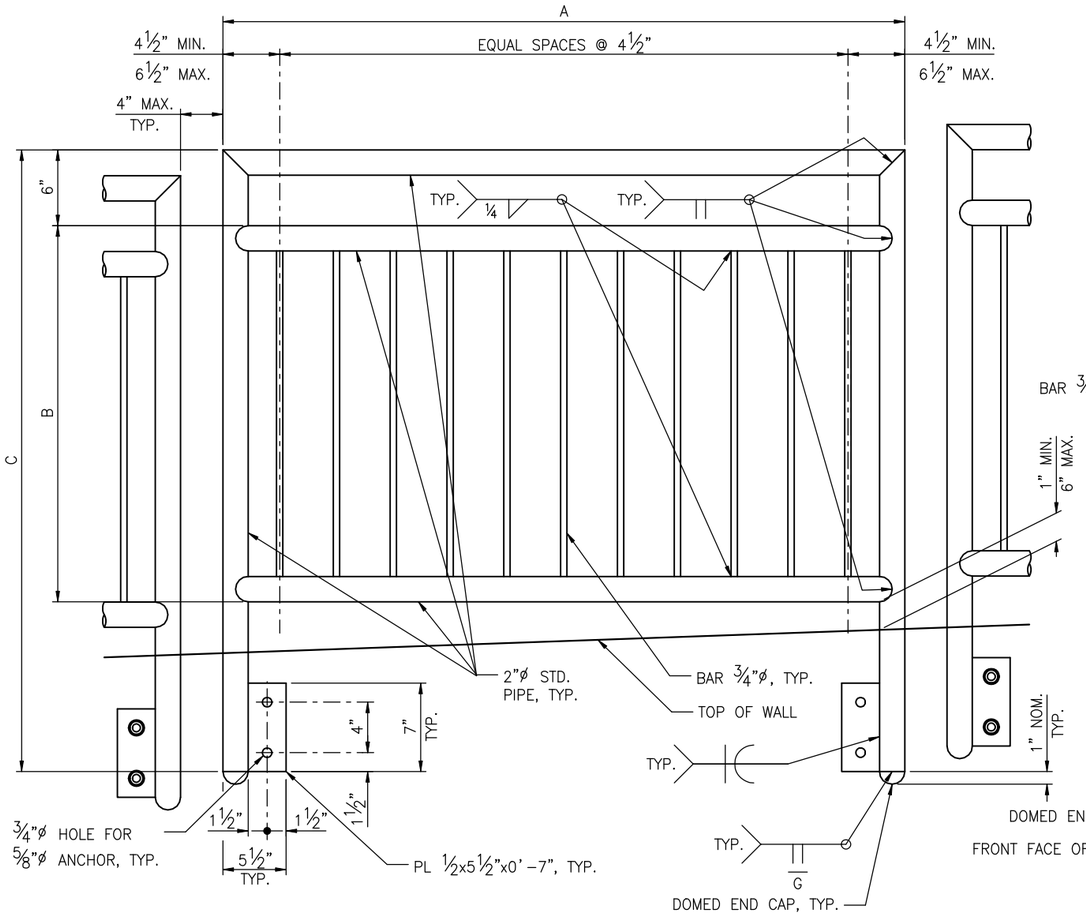

TYPICAL PANEL ELEVATION

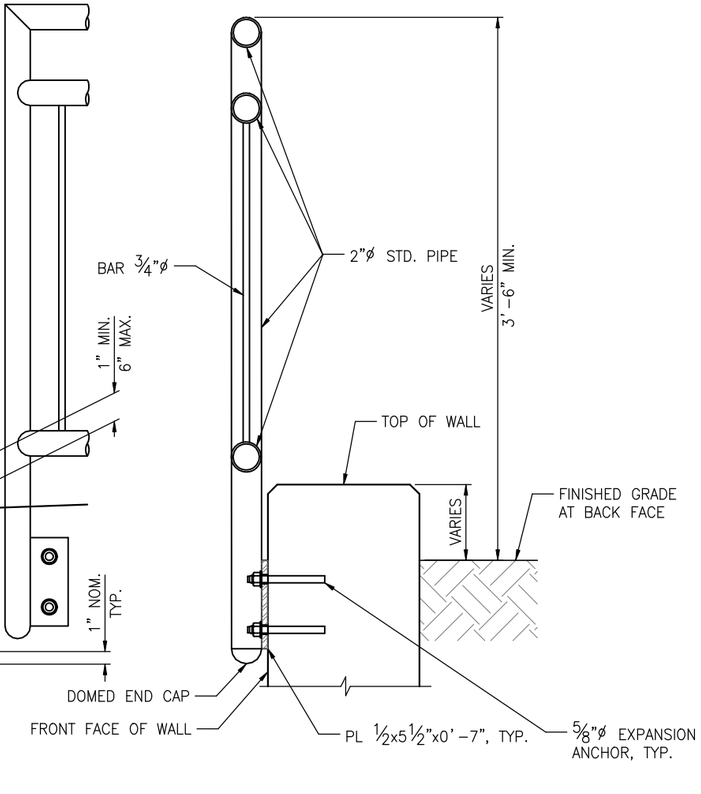

TYPICAL PANEL SECTION

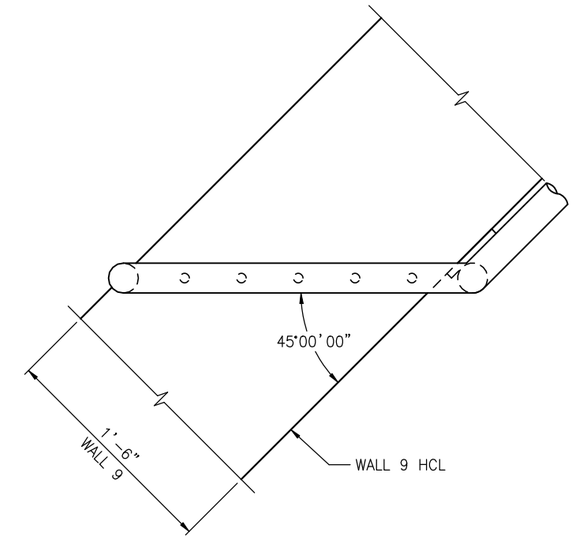

WALL 9 END PANEL CANTILEVER PLAN

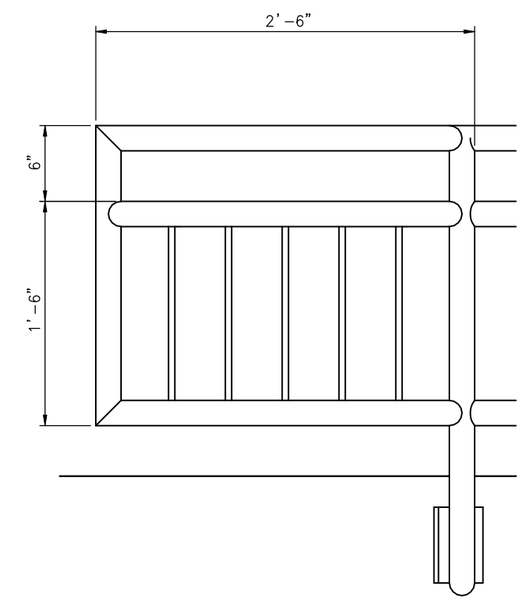

WALL 9 END PANEL CANTILEVER ELEVATION

(SIMILAR TO "TYPICAL PANEL ELEVATION" EXCEPT AS SHOWN)

DIMENSIONS

WALL NO.	NO. PANELS	A	B	C
1	16	4'-3"	2'-6"	4'-1"
3	16	5'-4"	2'-6"	4'-1"
4	9	4'-3"	2'-6"	4'-1"
5	19	4'-3"	2'-6"	4'-1"
7	12	4'-3"	2'-6"	4'-1"
9	5	4'-3"	1'-6"	3'-1"
9	26	5'-4"	2'-6"	4'-1"

NOTES

1. STEEL SHALL BE SHOP PAINTED IN ACCORDANCE WITH SECTION 509 OF THE STANDARD SPECIFICATIONS. THE COLOR SHALL BE BLACK, EQUIVALENT TO FEDERAL STANDARD 595B COLOR NO. 17038.
2. STEEL PLATES SHALL BE ASTM A 36.
3. EXPANSION ANCHORS AND EMBEDMENT SHALL BE APPROVED BY THE ENGINEER PRIOR TO CONSTRUCTION. EACH ANCHOR SHALL HAVE A MINIMUM ALLOWABLE TENSION CAPACITY OF 3200 LB.
4. FIELD DRILL AND INSTALL EXPANSION ANCHORS FOLLOWING MANUFACTURER'S RECOMMENDATIONS.
5. PANELS SHALL BE FABRICATED AND INSTALLED SUCH THAT POSTS ARE PLUMB AND HORIZONTAL MEMBERS ARE LEVEL.

TSIOUVARAS SIMMONS HOLDERNESS
CONSULTING ENGINEERS

12/7/2009 1:15:35 PM

Computer File Information		
Creation Date: 07-16-08	Initials: ARP	
Last Modification Date: 09-15-09	Initials: ARP	
Full Path: p:\070205d - 30th st\cad\sheets\		
File Name: 070205-W23-PedestrianRailingWall.dgn		
CAD Ver. MicroStation V8 Orig. Scale: NONE	Units: ENGLISH	

Sheet Revisions

CITY OF BOULDER PUBLIC WORKS DEPARTMENT

Colorado Department of Transportation
DOT
1420 Second Street
Greeley, CO 80631
Phone: (970) 350-2126
FAX: (970) 350-2198
Region 4 PJG

As Constructed
No Revisions:
Revised:
Void:

30th STREET TRANSPORTATION PROJECTS
RETAINING WALLS
WALL MOUNTED PEDESTRIAN RAILING

Designer: J. Simmons
Detailer: A. Pelster
Structure Numbers
Sheet Subset: WALLS
Subset Sheets: W23 of 27

Project No./Code
AQC M110-047
STU M110-053
AQC M110-055

Sheet Number 328

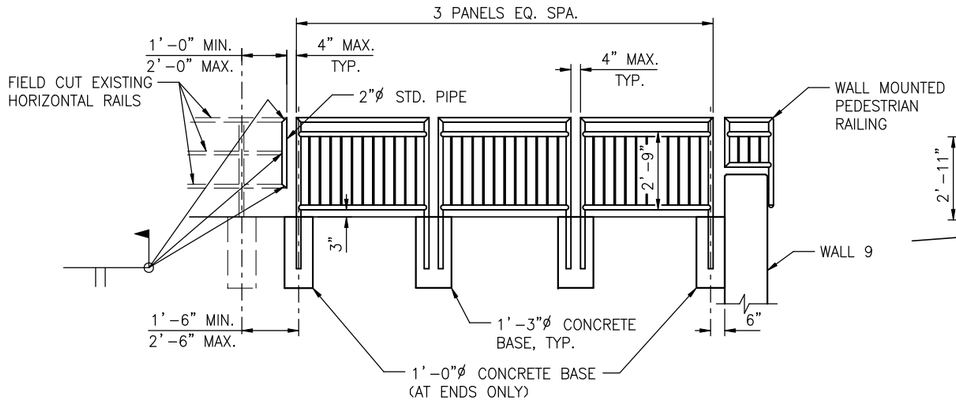

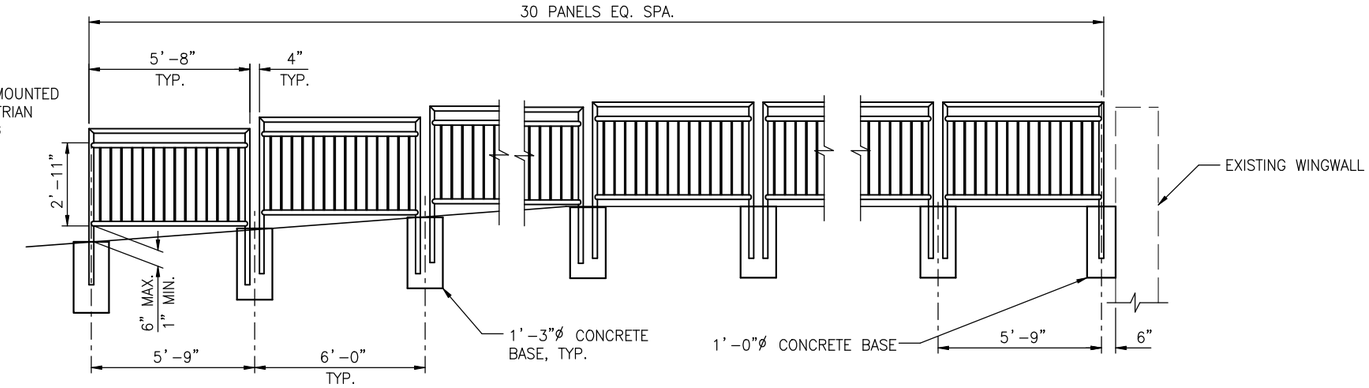

RAILING ELEVATION

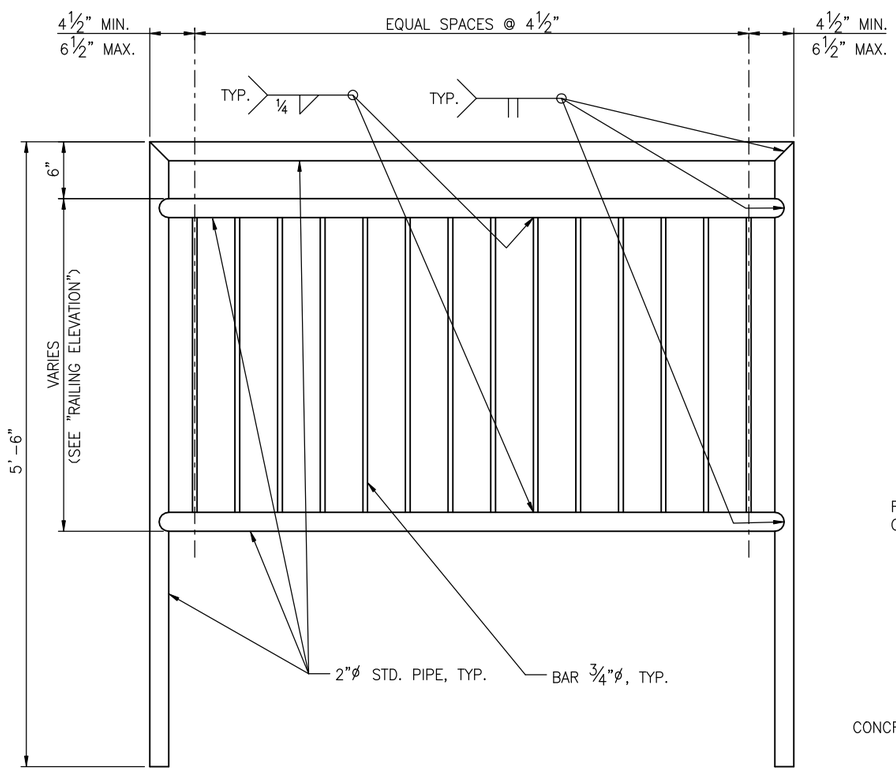

PANEL ELEVATION

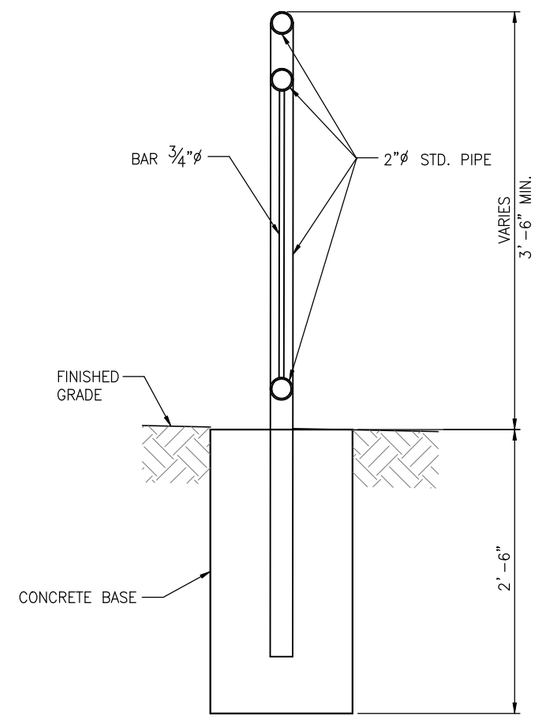

TYPICAL SECTION

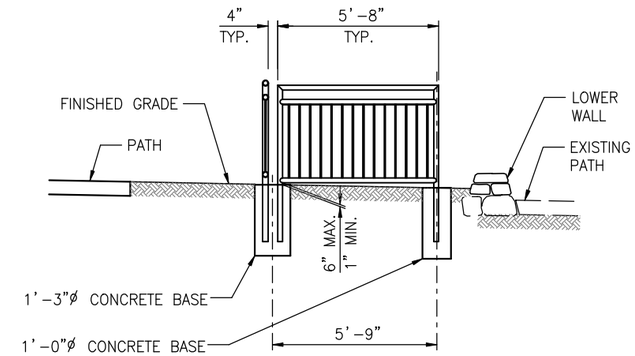

RETURN PANEL ELEVATION

NOTES

1. STEEL SHALL BE SHOP PAINTED IN ACCORDANCE WITH SECTION 509 OF THE STANDARD SPECIFICATIONS. THE COLOR SHALL BE BLACK, EQUIVALENT TO FEDERAL STANDARD 595B COLOR NO. 17038.
2. PANELS SHALL BE FABRICATED AND INSTALLED SUCH THAT POSTS ARE PLUMB AND HORIZONTAL MEMBERS ARE LEVEL.
3. CONCRETE BASE SHALL BE CLASS B AND SHALL BE INCLUDED IN THE COST OF PEDESTRIAN RAILING (STEEL).
4. SLOPE TOP OF CONCRETE BASE TO DRAIN AWAY FROM RAILING POSTS (1% MIN.).
5. FIELD PAINT NEW 2"ø PIPE AND FIELD WELDS AT END OF EXISTING RAILING. COLOR SHALL MATCH EXISTING RAILING.
6. COST FOR MODIFICATIONS TO EXISTING HANDRAIL SHALL BE INCLUDED IN ITEM 202, REMOVAL OF PORTIONS OF EXISTING STRUCTURE.

TSIOUVARAS SIMMONS HOLDERNESS
CONSULTING ENGINEERS

12/7/2009 1:15:38 PM

Computer File Information		
Creation Date: 07-17-08	Initials: ARP	
Last Modification Date: 07-29-08	Initials: ARP	
Full Path: p:\070205d - 30th st\cad\sheets\		
File Name: 070205-W24-PedestrianRailingGround.dgn		
CAD Ver. MicroStation V8 Orig. Scale: NONE	Units: ENGLISH	

Sheet Revisions

CITY OF BOULDER PUBLIC WORKS DEPARTMENT

Colorado Department of Transportation
DOT
1420 Second Street
Greeley, CO 80631
Phone: (970) 350-2126
FAX: (970) 350-2198
Region 4 PJG

As Constructed
No Revisions:
Revised:
Void:

30th STREET TRANSPORTATION PROJECTS
RETAINING WALLS
GROUND MOUNTED PEDESTRIAN RAILING

Designer: J. Simmons
Detailer: A. Pelster
Structure Numbers
Sheet Subset: WALLS
Subset Sheets: W24 of 27

Project No./Code
AQC M110-047
STU M110-053
AQC M110-055

Sheet Number 329

NOTES

1. LIMITS OF REMOVAL AND RECONSTRUCTION OF EXISTING ROCK WALL SHOWN ARE APPROXIMATE. ACTUAL LIMITS MAY VARY WITH FIELD CONDITIONS.

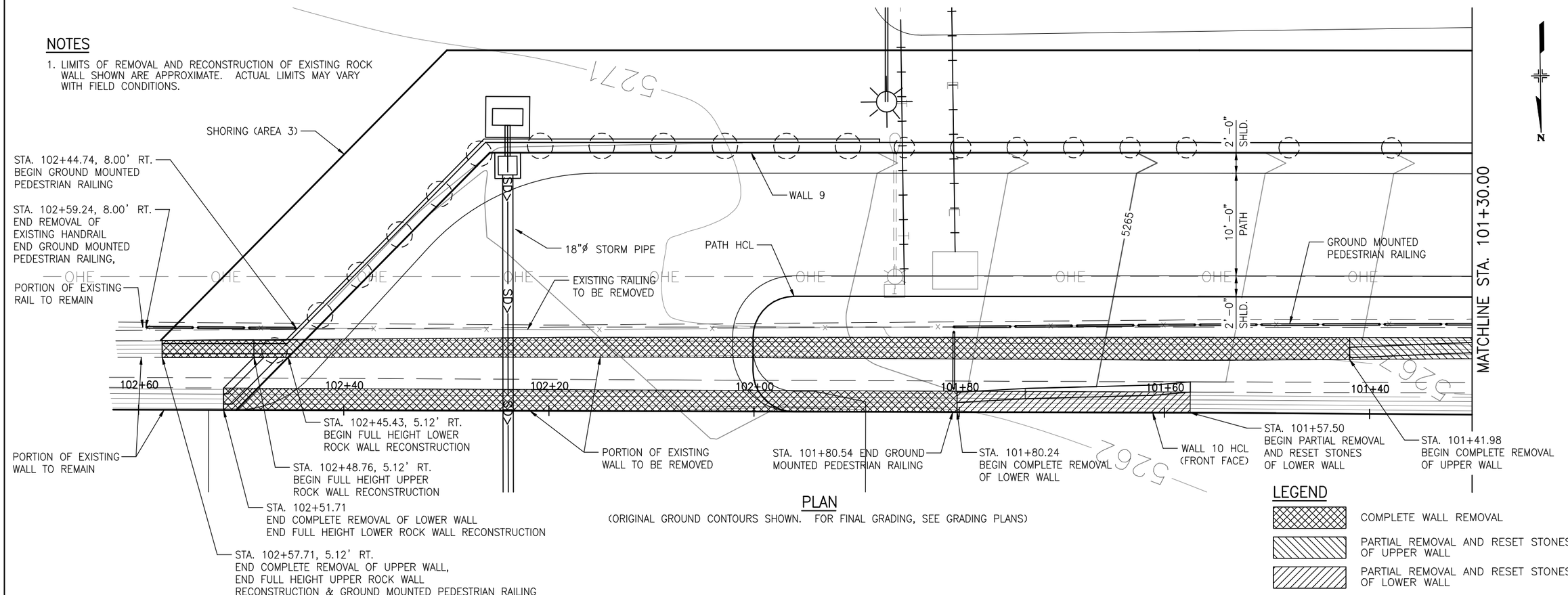

PLAN

(ORIGINAL GROUND CONTOURS SHOWN. FOR FINAL GRADING, SEE GRADING PLANS)

LEGEND

- COMPLETE WALL REMOVAL
- PARTIAL REMOVAL AND RESET STONES OF UPPER WALL
- PARTIAL REMOVAL AND RESET STONES OF LOWER WALL

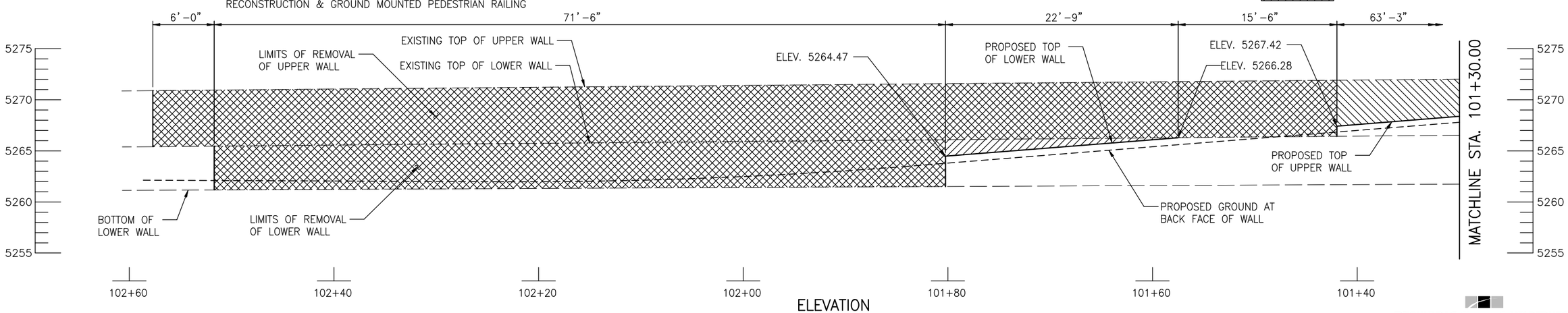

ELEVATION

(TAKEN AT WALL 10 HCL)
(PEDESTRIAN RAILING NOT SHOWN)

TSIOUVARAS SIMMONS HOLDERNESS
CONSULTING ENGINEERS

Computer File Information			
Creation Date:	07-14-08	Initials:	ARP
Last Modification Date:	09-04-09	Initials:	PMH
Full Path:	p:\070205d - 30th st\cad\sheets\		
File Name:	070205-W25-RockWallMod01.dgn		
CAD Ver. MicroStation V8	Orig. Scale: 1" = 10'	Units:	ENGLISH

Sheet Revisions

CITY OF BOULDER PUBLIC WORKS DEPARTMENT

Colorado Department of Transportation
1420 Second Street
Greeley, CO 80631
Phone: (970) 350-2126
FAX: (970) 350-2198
Region 4 PJG

As Constructed
No Revisions:
Revised:
Void:

30th STREET TRANSPORTATION PROJECTS
EXISTING ROCK WALL
MODIFICATIONS (1 OF 3)

Designer: G. Tsiouvaras
Detailer: A. Pelster
Structure Numbers
Sheet Subset: WALLS
Subset Sheets: W25 of 27

Project No./Code
AQC M110-047
STU M110-053
AQC M110-055

Sheet Number 330

12/7/2009 1:15:44 PM

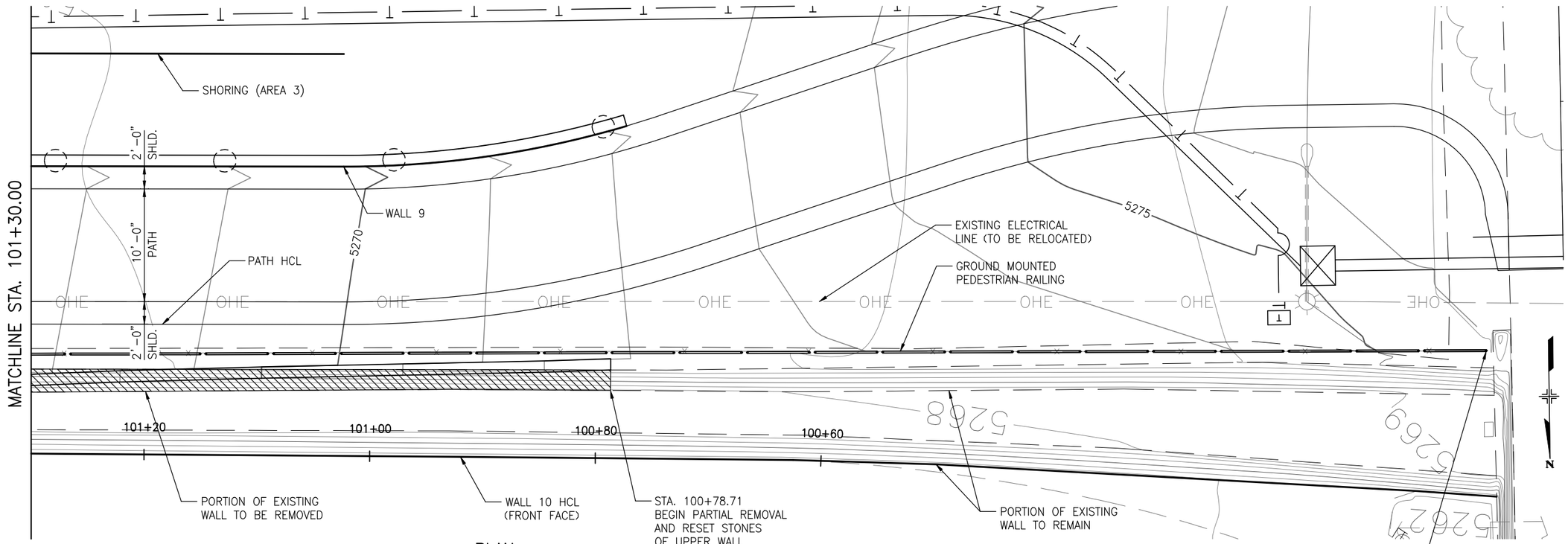

PLAN

(ORIGINAL GROUND CONTOURS SHOWN. FOR FINAL GRADING, SEE GRADING PLANS)

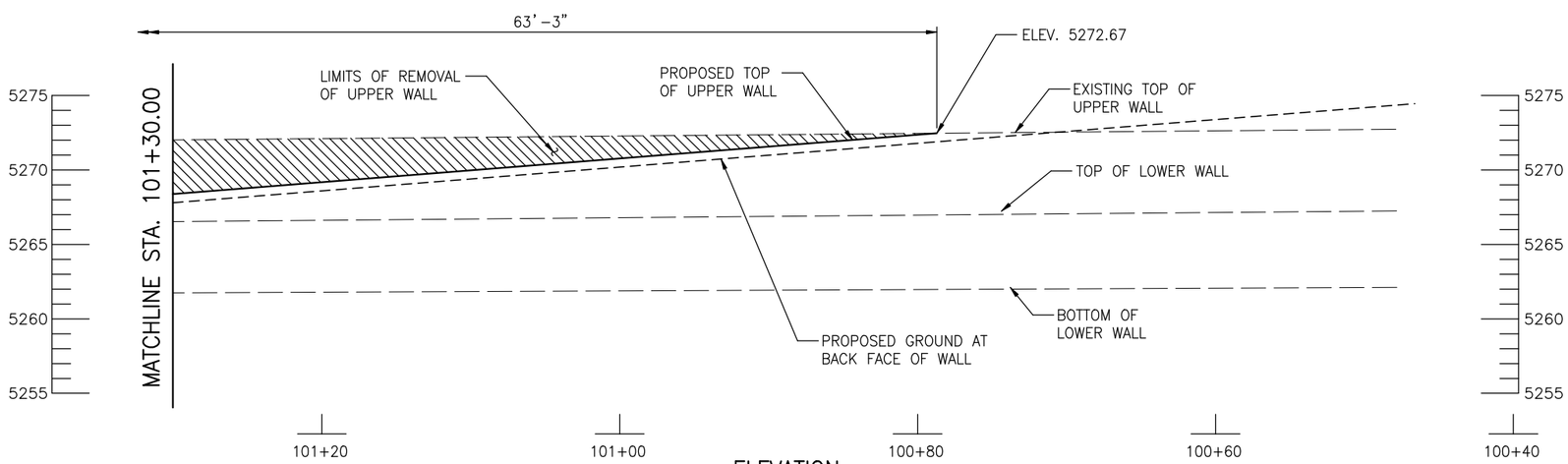

ELEVATION

(TAKEN AT WALL 10 HCL)
(PEDESTRIAN RAILING NOT SHOWN)

NOTES

1. LIMITS OF REMOVAL AND RECONSTRUCTION OF EXISTING ROCK WALL SHOWN ARE APPROXIMATE. ACTUAL LIMITS MAY VARY WITH FIELD CONDITIONS.

LEGEND

- COMPLETE WALL REMOVAL
- PARTIAL REMOVAL AND RESET STONES OF UPPER WALL

TSIOUVARAS SIMMONS HOLDERNESS
CONSULTING ENGINEERS

Computer File Information		
Creation Date: 07-14-08	Initials: ARP	
Last Modification Date: 11-24-09	Initials: SRF	
Full Path: p:\070205d - 30th st\cad\sheets\		
File Name: 070205-W26-RockWallMod02.dgn		
CAD Ver. MicroStation V8 Orig. Scale: 1" = 10'	Units: ENGLISH	

Sheet Revisions

CITY OF BOULDER PUBLIC WORKS DEPARTMENT

Colorado Department of Transportation
CDOT
1420 Second Street
Greeley, CO 80631
Phone: (970) 350-2126
FAX: (970) 350-2198
Region 4 PJG

As Constructed
No Revisions:
Revised:
Void:

30th STREET TRANSPORTATION PROJECTS
EXISTING ROCK WALL MODIFICATIONS (2 OF 3)

Designer: G. Tsiouvaras
Detailer: A. Pelster
Structure Numbers
Sheet Subset: WALLS
Subset Sheets: W26 of 27

Project No./Code
AQC M110-047
STU M110-053
AQC M110-055

Sheet Number 331

12/7/2009 1:15:48 PM

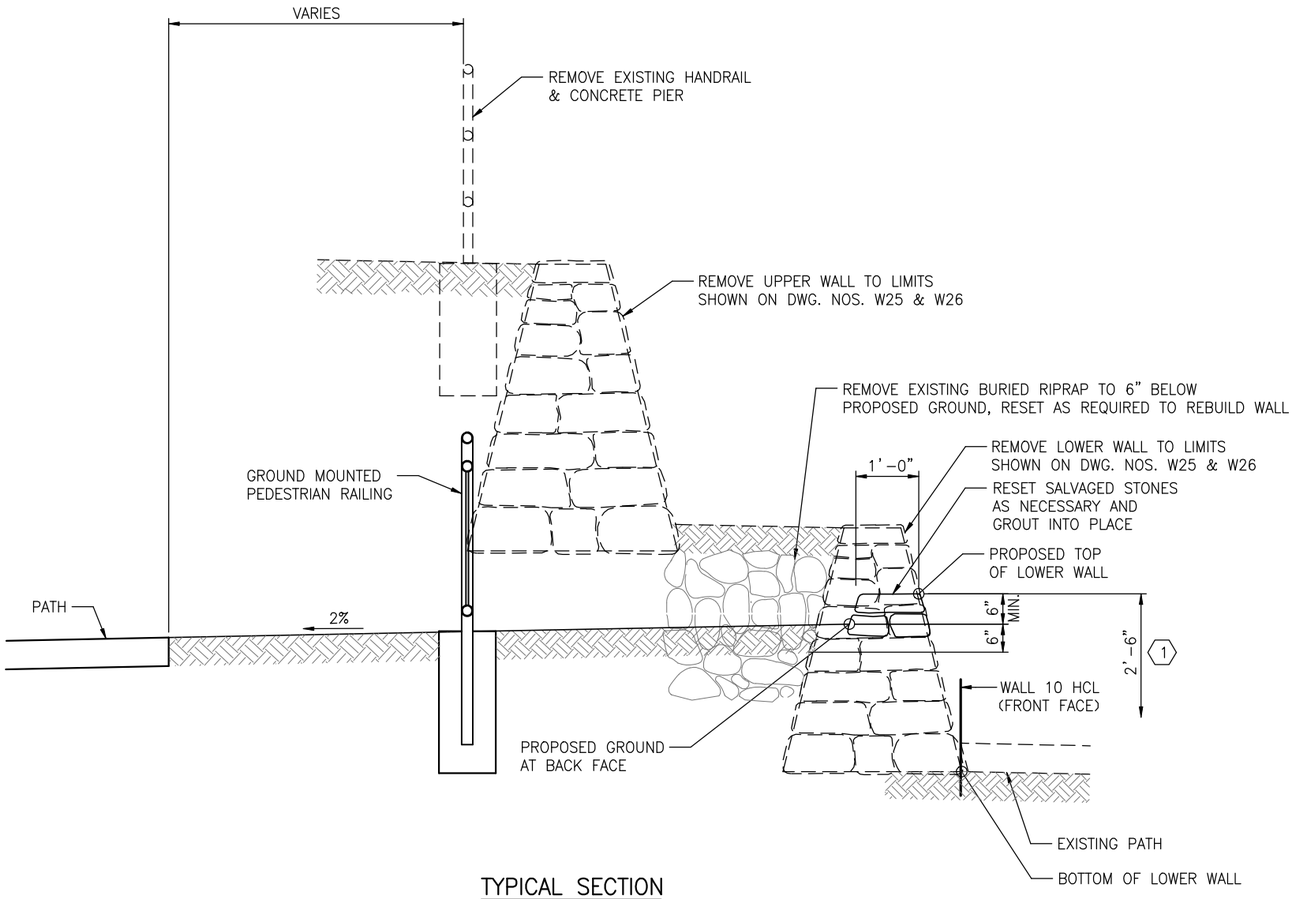

TYPICAL SECTION

(TAKEN NORMAL TO WALL 10 HCL)
(LOOKING BACK STATION)

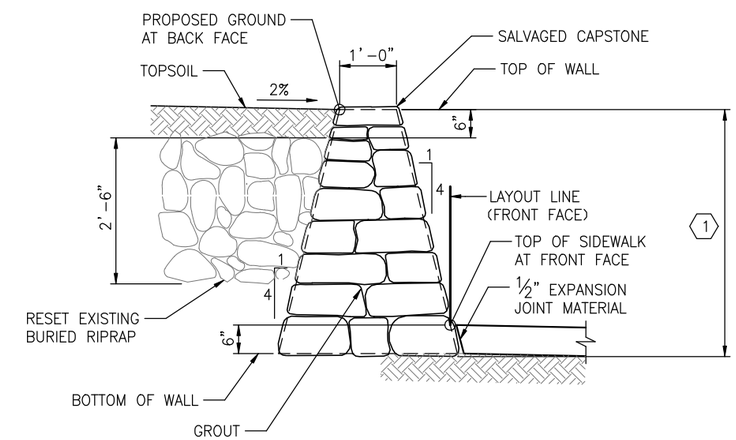

ROCK WALL RECONSTRUCTION

KEY NOTES

(1) PAY LIMITS OF ITEM 210 – REBUILD PORTIONS OF ROCK WALL, REMOVAL EXTENTS SHALL BE THAT AS NOTED ON THESE PLANS. ADDITIONAL REMOVALS SHALL BE AT THE CONTRACTORS COST UNLESS APPROVED BY THE ENGINEER.

NOTES

1. ALL COSTS ASSOCIATED WITH REMOVAL OF EXISTING WALLS, RIPRAP AND PEDESTRIAN RAILING SHALL BE INCLUDED IN ITEM 202 – REMOVAL OF PORTIONS OF PRESENT STRUCTURE.
2. CARE SHALL BE TAKEN DURING REMOVAL OF EXISTING WALL TO MINIMIZE DAMAGE SUCH THAT SUFFICIENT MATERIALS ARE SLAVAGED FOR ROCK WALL RECONSTRUCTION, IN ACCORDANCE WITH SUBSECTION 202.03 OF THE SPECIFICATIONS.
3. RESETTING OF EXISTING BURIED RIPRAP SHALL BE INCLUDED IN ITEM 210 – REBUILD PORTIONS OF ROCK WALL.

TSIOUVARAS SIMMONS HOLDERNESS
CONSULTING ENGINEERS

12/7/2009 1:15:51 PM

Computer File Information			
Creation Date:	07-14-08	Initials:	ARP
Last Modification Date:	6-19-09	Initials:	SRF
Full Path:	p:\070205d – 30th st\cad\sheets\		
File Name:	070205-W27-RockWallMod03.dgn		
CAD Ver. MicroStation V8	Orig. Scale: NONE	Units:	ENGLISH

Sheet Revisions

CITY OF BOULDER PUBLIC WORKS DEPARTMENT

Colorado Department of Transportation
1420 Second Street
Greeley, CO 80631
Phone: (970) 350-2126
FAX: (970) 350-2198
Region 4 PJG

As Constructed
No Revisions:
Revised:
Void:

30th STREET TRANSPORTATION PROJECTS
EXISTING ROCK WALL
MODIFICATIONS (3 OF 3)

Designer:	G. Tsiouvaras	Structure Numbers	
Detailer:	A. Pelster		
Sheet Subset:	WALLS	Subset Sheets:	W27 of 27

Project No./Code
AQC M110-047
STU M110-053
AQC M110-055

Sheet Number 332